UNITED STATES DISTRICT COURT
FOR THE EASTERN DISTRICT OF PENNSYLVANIA

INFINITY COMPUTER PRODUCTS, INC., Plaintiff, v. HEWLETT-PACKARD COMPANY, Defendant.	Civil Action No. _____ DEMAND FOR JURY TRIAL

SEVERED COMPLAINT FOR PATENT INFRINGEMENT

Plaintiff Infinity Computer Products, Inc. ("Infinity"), for its Severed Complaint For Patent Infringement against Defendant Hewlett-Packard Company ("Defendant"), hereby demands a jury trial and alleges as follows:

NATURE OF THE ACTION

1. This is a patent infringement action to stop Defendant's infringement of Infinity's United States Patent Nos. 6,894,811 (the "'811 Patent"), 7,489,423 (the "'423 Patent"), 8,040,574 (the "'574 Patent"), and 8,294,915 (the "'915 Patent") (collectively referred to as the "Patents-in-Suit"), each issued by the United States Patent and Trademark Office ("USPTO"). Infinity is the exclusive owner of the Patents-in-Suit. Infinity seeks injunctive relief and monetary damages.

2. Infinity previously brought a patent infringement action in this Court (hereinafter the "Related Action") to stop the infringement of the '811 Patent and the '423 Patent by Defendant and 14 other corporate entities engaged in the manufacture and sale of computer-related products (hereinafter "Related Parties").[1] Defendant and Related Parties were accused in the Related Action of manufacturing and selling products which have the capability of sending

[1] *Infinity Computer Products, Inc. v. Brother International Corp., et al.*, E.D. Pa, Case No. 2:10-cv-03175-LDD, filed June 30, 2010.

facsimiles, scanning, copying and printing (hereinafter the "multi-function products"). On November 16, 2012, Defendant was severed from that action by order of this Court (Dkt. No. 280).

THE PARTIES

3. Infinity is a corporation organized under the laws of the State of Pennsylvania having its principal place of business at 315 Saybrook Rd., Villanova, Pennsylvania 19085.

4. On information and belief, Defendant is a corporation organized and existing under the laws of Delaware with its principal place of business at 3000 Hanover Street, Palo Alto, California 94304-1185, and may be served care of its registered agent, The Corporation Trust Company, which itself is located at Corporation Trust Center, 1209 Orange Street, Wilmington, Delaware, 19801.[2] On information and belief, Defendant is registered as a foreign corporation with the Pennsylvania Department of State and has been since May 5, 1998.

[2] On information and belief, Hewlett-Packard Company is also registered with the California Secretary of State as a foreign corporation and may be served care of its registered agent in California, CT Corporation System, whose address is 818 W. Seventh Street, Los Angeles, CA, 90017.

JURISDICTION AND VENUE

5. This action arises under the Patent Laws of the United States, 35 U.S.C. § 1 et seq., including 35 U.S.C. §§ 271, 281, 283, 284 and 285.

6. This Court has subject matter jurisdiction over this action pursuant to 28 U.S.C. §§ 1331 and 1338(a).

7. The Court has personal jurisdiction over Defendant because: Defendant has minimum contacts within the State of Pennsylvania and the Eastern District of Pennsylvania; Defendant has purposefully availed itself of the privileges of conducting business in the State of Pennsylvania and in the Eastern District of Pennsylvania; Defendant has sought protection and benefit from the laws of the State of Pennsylvania; Defendant regularly conducts business within the State of Pennsylvania and within the Eastern District of Pennsylvania; and Infinity's causes of action arise directly from Defendant's business contacts and other activities in the State of Pennsylvania and in the Eastern District of Pennsylvania.

8. More specifically, Defendant, directly and/or through its intermediaries, ships, distributes, offers for sale, sells, and/or advertises (including the provision of an interactive web page) its products and services in the United States, the State of Pennsylvania, and the Eastern District of Pennsylvania. Upon information and belief, Defendant and/or its respective customers have committed

patent infringement in the State of Pennsylvania and in the Eastern District of Pennsylvania. Defendant solicits customers in the State of Pennsylvania and in the Eastern District of Pennsylvania. Defendant has many paying customers who are residents of the State of Pennsylvania and the Eastern District of Pennsylvania and who use Defendant's products and services in the State of Pennsylvania and in the Eastern District of Pennsylvania.

9. Venue is proper in this judicial district pursuant to 28 U.S.C. §§ 1391 and 1400(b).

FACTUAL BACKGROUND

10. On May 17, 2005, the '811 Patent, entitled "INTERFACE CIRCUIT FOR UTILIZING A FACSIMILE COUPLED TO A PC AS A SCANNER OR PRINTER," was duly and legally issued by the USPTO. On July 1, 2012, an *Ex Parte* Reexamination Certificate was issued re-affirming the USPTO's initial determination of the patentability each of the claims as amended. A copy of the '811 Patent is attached hereto as Exhibit A.

11. On February 10, 2009, the '423 Patent, also entitled "INTERFACE CIRCUIT FOR UTILIZING A FACSIMILE MACHINE COUPLED TO A PC AS A SCANNER OR PRINTER," was duly and legally issued by the USPTO. On

May 1, 2012, an *Ex Parte* Reexamination Certificate was issued re-affirming the USPTO's initial determination of the patentability each of the claims as amended. A copy of the '423 Patent is attached hereto as Exhibit B.

12. On October 18, 2011, the '574 Patent, also entitled "INTERFACE CIRCUIT FOR UTILIZING A FACSIMILE MACHINE COUPLED TO A PC AS A SCANNER OR PRINTER," was duly and legally issued by the USPTO. A copy of the '574 Patent is attached hereto as Exhibit C.

13. On October 23, 2012, the '915 Patent, also entitled "INTERFACE CIRCUIT FOR UTILIZING A FACSIMILE MACHINE COUPLED TO A PC AS A SCANNER OR PRINTER," was duly and legally issued by the USPTO. A copy of the '915 Patent is attached hereto as Exhibit D.

14. Infinity is the assignee of all rights, title, and interest in and to the Patents-in-Suit, and possesses all rights of recovery under the Patents-in-Suit, including the right to sue for infringement and recover past damages.

15. For a period of time prior to the filing of the Related Action, Infinity engaged in correspondence with Defendant during which the '811 Patent and the '423 Patent were disclosed.

COUNT ONE
INFRINGEMENT OF THE '811 PATENT

16. Infinity repeats and incorporates herein the entirety of the statements and allegations contained in Paragraphs 1 through 15 above.

17. On information and belief, and in violation of 35 U.S.C. § 271(a), Defendant has, literally and under the doctrine of equivalents, infringed the '811 Patent and still is, literally and under the doctrine of equivalents, infringing the '811 Patent, by, among other things, making, using, offering for sale, and/or selling without authority a facsimile machine with an interface circuit that allows it to be coupled to a computer as a printer or scanner, including but not limited to its OfficeJet 4620 e-All-in-One product and similar multi-function products, and will continue to do so unless said infringing activities are enjoined by this Court.

18. On information and belief, Defendant has business relationships in which Defendant is a manufacturer, supplier, customer, agent, authorized re-seller, or otherwise a partner with one or more of the Related Parties or business entities yet to be identified. In particular, several of Defendant's products are made available for sale on the website of one of the Related Parties. *See* Exhibit E.

19. On information and belief, Defendant had knowledge of the '811 Patent prior to the filing of this action.

20. On information and belief, Defendant owns, operates, advertises, and controls its website, www.hp.com, through which Defendant advertises, sells, offers to sell, and/or instructs customers how to use its multi-function products.

21. On information and belief, and in violation of 35 U.S.C. § 271(b), Defendant has actively induced and continues to induce its customers and business partners to infringe one or more claims of the '811 patent in this district and elsewhere in the United States by its intentional acts which have successfully, among other things, encouraged, instructed, enabled and otherwise caused its customers to use its multi-function products in an infringing manner having been provided by Defendant to its customers for the primary purpose of causing infringing acts by said customers. Upon information and belief, Defendant has specifically intended and/or specifically intends that its customers use the infringing products in such a way that infringes the '811 patent by, at minimum, selling said infringing products and providing instructions on how to use the accused products in such a way that infringes the '811 patent to its customers and knew and/or knows that its actions, including but not limited to providing such instructions, would induce, have induced, and will continue to induce infringement by its customers. Defendant knowingly induced infringement and possessed specific intent to encourage another's infringement which led to direct

infringement by a third party by soliciting distributors and/or retailers to offer for sale and/or sell the infringing products, and by soliciting end users to purchase and use the infringing products, in this district and elsewhere in the United States.

22. On information and belief, Defendant has willfully infringed and continues to willfully infringe the '811 Patent through its intentional actions despite its prior knowledge.

23. Infinity has suffered, and will continue to suffer, damages as a result of the Defendant's infringing activities.

COUNT TWO
INFRINGEMENT OF THE '423 PATENT

24. Infinity repeats and incorporates herein the entirety of the statements and allegations contained in Paragraphs 1 through 15 above.

25. On information and belief, and in violation of 35 U.S.C. § 271(a), Defendant has, literally and under the doctrine of equivalents, infringed the '423 Patent and still is, literally and under the doctrine of equivalents, infringing the '423 Patent, by, among other things, making, using, offering for sale, and/or selling without authority a facsimile machine with an interface circuit that allows it to be coupled to a computer as a printer or scanner, including but not limited to its

OfficeJet 4620 e-All-in-One product and similar multi-function products, and will continue to do so unless said infringing activities are enjoined by this Court.

26. On information and belief, Defendant has business relationships in which Defendant is a manufacturer, supplier, customer, agent, authorized re-seller, or otherwise a partner with one or more of the Related Parties or business entities yet to be identified. In particular, several of Defendant's products are made available for sale on the website of one of the Related Parties. *See* Exhibit E.

27. On information and belief, Defendant had knowledge of the '423 Patent prior to the filing of this action.

28. On information and belief, Defendant owns, operates, advertises, and controls its website, www.hp.com, through which Defendant advertises, sells, offers to sell, and/or instructs customers how to use its multi-function products.

29. On information and belief, and in violation of 35 U.S.C. § 271(b), Defendant has actively induced and continues to induce its customers and business partners to infringe one or more claims of the '423 patent in this district and elsewhere in the United States by its intentional acts which have successfully, among other things, encouraged, instructed, enabled and otherwise caused its customers to use its multi-function products in an infringing manner having been provided by Defendant to its customers for the primary purpose of causing

infringing acts by said customers. Upon information and belief, Defendant has specifically intended and/or specifically intends that its customers use the infringing products in such a way that infringes the '423 patent by, at minimum, selling said infringing products and providing instructions on how to use the accused products in such a way that infringes the '423 patent to its customers and knew and/or knows that its actions, including but not limited to providing such instructions, would induce, have induced, and will continue to induce infringement by its customers. Defendant knowingly induced infringement and possessed specific intent to encourage another's infringement which led to direct infringement by a third party by soliciting distributors and/or retailers to offer for sale and/or sell the infringing products, and by soliciting end users to purchase and use the infringing products, in this district and elsewhere in the United States.

30. On information and belief, Defendant has willfully infringed and continues to willfully infringe the '423 Patent through its intentional actions despite its prior knowledge.

31. Infinity has suffered, and will continue to suffer, damages as a result of the Defendant's infringing activities.

COUNT THREE
INFRINGEMENT OF THE '574 PATENT

32. Infinity repeats and incorporates herein the entirety of the statements and allegations contained in Paragraphs 1 through 15 above.

33. On information and belief, and in violation of 35 U.S.C. § 271(a), Defendant has, literally and under the doctrine of equivalents, infringed the '574 Patent and still is, literally and under the doctrine of equivalents, infringing the '574 Patent, by, among other things, making, using, offering for sale, and/or selling without authority a facsimile machine with an interface circuit that allows it to be coupled to a computer as a printer or scanner, including but not limited to its OfficeJet 4620 e-All-in-One product and similar multi-function products, and will continue to do so unless said infringing activities are enjoined by this Court.

34. On information and belief, Defendant has business relationships in which Defendant is a manufacturer, supplier, customer, agent, authorized re-seller, or otherwise a partner with one or more of the Related Parties or business entities yet to be identified. In particular, several of Defendant's products are made available for sale on the website of one of the Related Parties. *See* Exhibit E.

35. On information and belief, Defendant had knowledge of the '574 Patent prior to the filing of this action.

36. On information and belief, Defendant owns, operates, advertises, and controls its website, www.hp.com, through which Defendant advertises, sells, offers to sell, and/or instructs customers how to use its multi-function products.

37. On information and belief, and in violation of 35 U.S.C. § 271(b), Defendant has actively induced and continues to induce its customers and business partners to infringe one or more claims of the '574 patent in this district and elsewhere in the United States by its intentional acts which have successfully, among other things, encouraged, instructed, enabled and otherwise caused its customers to use its multi-function products in an infringing manner having been provided by Defendant to its customers for the primary purpose of causing infringing acts by said customers. Upon information and belief, Defendant has specifically intended and/or specifically intends that its customers use the infringing products in such a way that infringes the '574 patent by, at minimum, selling said infringing products and providing instructions on how to use the accused products in such a way that infringes the '574 patent to its customers and knew and/or knows that its actions, including but not limited to providing such instructions, would induce, have induced, and will continue to induce infringement by its customers. Defendant knowingly induced infringement and possessed specific intent to encourage another's infringement which led to direct

infringement by a third party by soliciting distributors and/or retailers to offer for sale and/or sell the infringing products, and by soliciting end users to purchase and use the infringing products, in this district and elsewhere in the United States.

38. On information and belief, Defendant has willfully infringed and continues to willfully infringe the '574 Patent through its intentional actions despite its prior knowledge.

39. Infinity has suffered, and will continue to suffer, damages as a result of the Defendant's infringing activities.

COUNT FOUR
INFRINGEMENT OF THE '915 PATENT

40. Infinity repeats and incorporates herein the entirety of the statements and allegations contained in Paragraphs 1 through 15 above.

41. On information and belief, and in violation of 35 U.S.C. § 271(a), Defendant has, literally and under the doctrine of equivalents, infringed the '915 Patent and still is, literally and under the doctrine of equivalents, infringing the '915 Patent, by, among other things, making, using, offering for sale, and/or selling without authority a facsimile machine with an interface circuit that allows it to be coupled to a computer as a printer or scanner, including but not limited to its

OfficeJet 4620 e-All-in-One product and similar multi-function products, and will continue to do so unless said infringing activities are enjoined by this Court.

42. On information and belief, Defendant has business relationships in which Defendant is a manufacturer, supplier, customer, agent, authorized re-seller, or otherwise a partner with one or more of the Related Parties or business entities yet to be identified. In particular, several of Defendant's products are made available for sale on the website of one of the Related Parties. *See* Exhibit E.

43. On information and belief, Defendant had knowledge of the '915 Patent prior to the filing of this action.

44. On information and belief, Defendant owns, operates, advertises, and controls its website, www.hp.com, through which Defendant advertises, sells, offers to sell, and/or instructs customers how to use its multi-function products.

45. On information and belief, and in violation of 35 U.S.C. § 271(b), Defendant has actively induced and continues to induce its customers and business partners to infringe one or more claims of the '915 patent in this district and elsewhere in the United States by its intentional acts which have successfully, among other things, encouraged, instructed, enabled and otherwise caused its customers to use its multi-function products in an infringing manner having been provided by Defendant to its customers for the primary purpose of causing

infringing acts by said customers. Upon information and belief, Defendant has specifically intended and/or specifically intends that its customers use the infringing products in such a way that infringes the '915 patent by, at minimum, selling said infringing products and providing instructions on how to use the accused products in such a way that infringes the '915 patent to its customers and knew and/or knows that its actions, including but not limited to providing such instructions, would induce, have induced, and will continue to induce infringement by its customers. Defendant knowingly induced infringement and possessed specific intent to encourage another's infringement which led to direct infringement by a third party by soliciting distributors and/or retailers to offer for sale and/or sell the infringing products, and by soliciting end users to purchase and use the infringing products, in this district and elsewhere in the United States.

46. On information and belief, Defendant has willfully infringed and continues to willfully infringe the '915 Patent through its intentional actions despite its prior knowledge.

47. Infinity has suffered, and will continue to suffer, damages as a result of the Defendant's infringing activities.

JURY DEMAND

48. Infinity demands a trial by jury on all issues.

PRAYER FOR RELIEF

49. WHEREFORE, Infinity prays for a judgment against Defendant on all Counts as follows:

A. Finding that Defendant has infringed, and actively induced infringement of, one or more claims of the '811 Patent;

B. Finding that Defendant has infringed, and actively induced infringement of, one or more claims of the '423 Patent;

C. Finding that Defendant has infringed, and actively induced infringement of, one or more claims of the '574 Patent;

D. Finding that Defendant has infringed, and actively induced infringement of, one or more claims of the '915 Patent;

E. Enjoining Defendant, its officers, agents, attorneys, servants, and those in privity with it, including distributors, retailers, and customers, from infringing the '811 Patent, the '423 Patent, the '574 Patent, and the '915 Patent, pursuant to 35 U.S.C. § 283;

F. Awarding damages in an amount adequate to compensate Infinity for Defendant's infringement of the '811 Patent, the '423 Patent, the '574 Patent, and the '915 Patent, pursuant to 35 U.S.C. § 284;

G. Awarding enhanced damages for Defendant's willful infringement of the '811 Patent, the '423 Patent, the '574 Patent, and the '915 Patent, pursuant to 35 U.S.C. § 284;

H. Awarding Infinity's reasonable attorneys' fees and costs pursuant to 35 U.S.C. § 285 and Rule 54(d) of the Federal Rules of Civil Procedure;

I. Awarding prejudgment and post-judgment interest; and

J. Granting such other and further relief as the Court deems just and proper.

/
/

Date: December 5, 2012.

/s/ Douglas L. Bridges
Douglas L. Bridges
Pro Hac Vice to be applied for
Email: dbridges@hgdlawfirm.com
HENINGER GARRISON DAVIS, LLC
169 Dauphin Street, Suite 100
Mobile, Alabama 36602
Telephone: (251) 298-8701 Fax: (205) 547-5504

Robert L. Sachs, Jr., Esq.
E-mail: RSachs@shragerlaw.com
SHRAGER, SPIVEY & SACHS
One Commerce Square
2005 Market Street, Suite 2300
Philadelphia, PA 19103
Telephone: (215) 568-7771 Fax: (215) 568-7495

Attorneys for Infinity Computer Products, Inc.

EXHIBIT A

US006894811B1

(12) **United States Patent**
Nachman et al.

(10) **Patent No.: US 6,894,811 B1**
(45) **Date of Patent: May 17, 2005**

(54) **INTERFACE CIRCUIT FOR UTILIZING A FACSIMILE COUPLED TO A PC AS A SCANNER OR PRINTER**

(76) Inventors: **Bruce Nachman**, deceased, late of Wayne, PA (US); by **Marvin Nachman**, legal representative, 315 Saybrook Rd., Villanova, PA (US) 19085

(*) Notice: Subject to any disclaimer, the term of this patent is extended or adjusted under 35 U.S.C. 154(b) by 0 days.

(21) Appl. No.: **08/669,056**

(22) Filed: **Jun. 24, 1996**

Related U.S. Application Data

(63) Continuation-in-part of application No. 08/226,278, filed on Apr. 11, 1994, now Pat. No. 5,530,558.

(51) **Int. Cl.**[7] **H04N 1/32**; H04N 1/04

(52) **U.S. Cl.** **358/442**; 358/468; 358/474; 379/100.01

(58) **Field of Search** 358/442, 468, 358/443, 400, 401, 434–437, 474, 1.13, 1.15, 440, 1.6; 379/100, 251, 252, 375, 93, 100.15, 100.01, 100.02, 100.06, 100.05, 100.13

(56) **References Cited**

U.S. PATENT DOCUMENTS

4,821,312 A * 4/1989 Horton et al. 358/442
5,452,106 A * 9/1995 Perkins 358/442
5,530,558 A * 6/1996 Nachman 358/442
5,608,546 A * 3/1997 Nakamura et al. 358/442
5,823,689 A * 10/1998 Nehowig et al. 400/83
6,134,017 A * 10/2000 Schlank et al. 358/1.15

* cited by examiner

Primary Examiner—Cheukfan Lee

(57) **ABSTRACT**

Apparatus for interfacing a conventional facsimile machine with a PC enabling the use of the facsimile machine as a scanner or printer. A first switch assembly selectively couples the PC modem and facsimile machine either to independent telephone lines in a normal mode or to one another in a scan/print mode. A manually operated switch assembly is depressed for a brief interval sufficient to activate a ringing circuit which converts DC power from a small battery source to a 20 Hz sine wave of 90 volt amplitude and applies the sine wave signal to the PC to cause the PC or facsimile to enter into a scan or print mode, respectively. The manually operable switch is then released to apply a constant current to the facsimile machine to simulate an off-hook condition. A facsimile machine start button is then operated to start the facsimile machine which scans documents provided therein and transmits the scanned data in a conventional facsimile transmission format or activate the PC to transmit a fax in conventional facsimile transmission format to utilize the facsimile machine as a printer. The PC may be equipped with a suitable software program for converting non-graphic, i.e. such as word-type information into a binary format suitable for use in word processing applications and may store the data in a memory for subsequent use. An automatic circuit may be provided to initiate a scanning or printing mode responsive to receipt of a unique number received from either the facsimile machine or the PC, thus eliminating the need for switches.

20 Claims, 11 Drawing Sheets

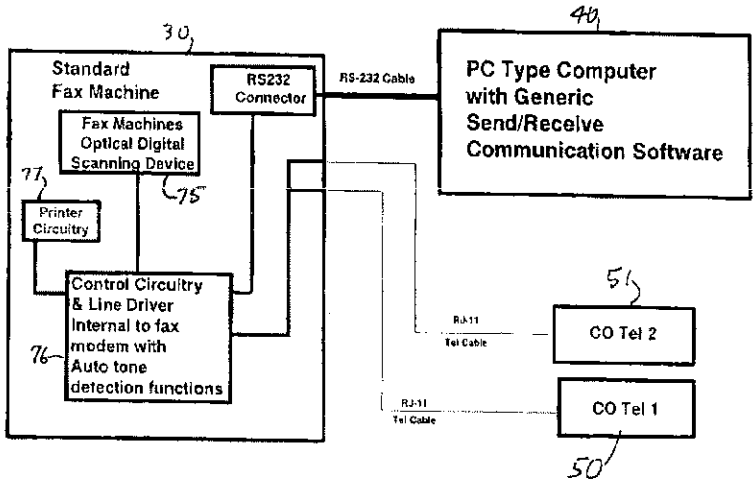

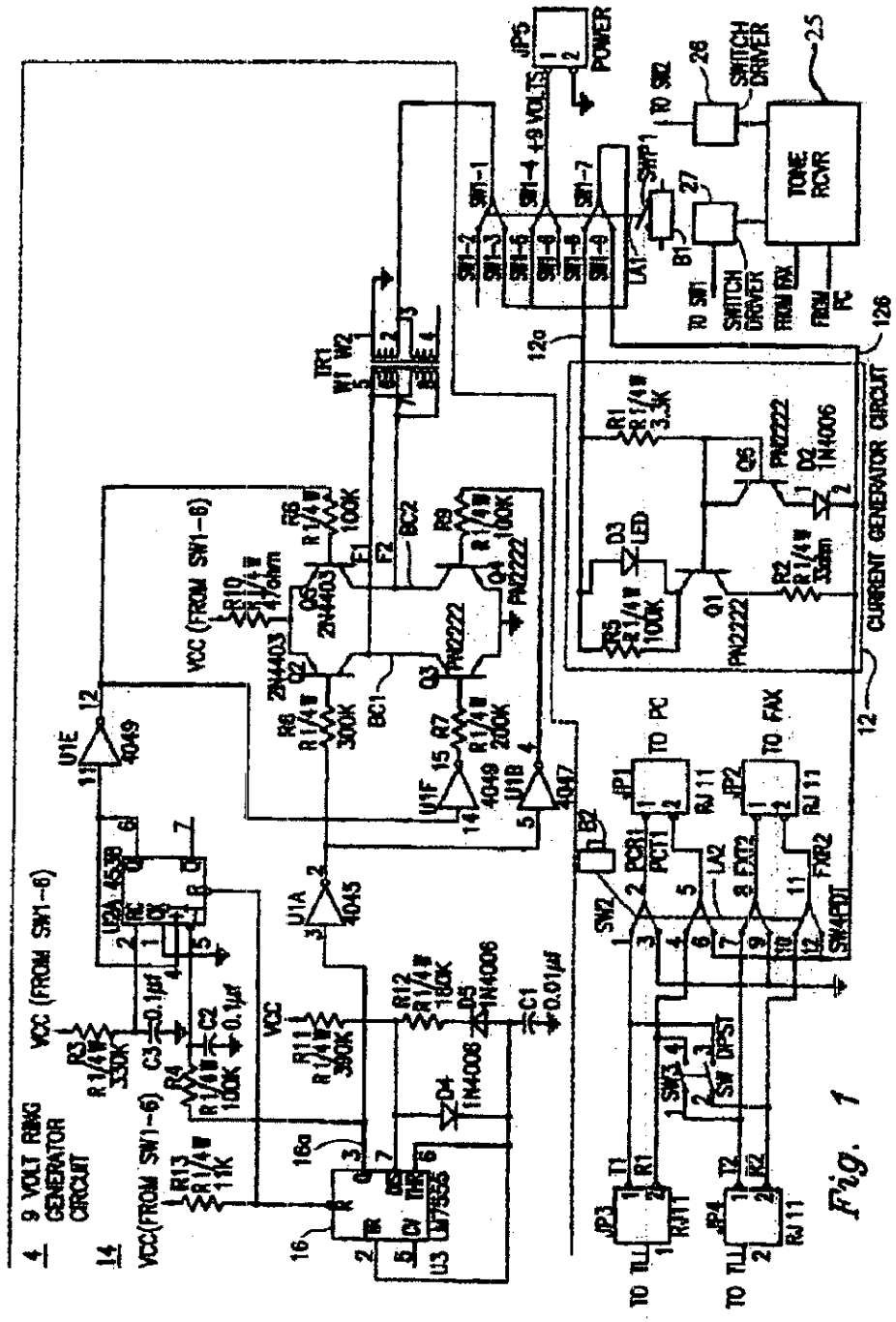
9 VOLT RING GENERATOR CIRCUIT
CURRENT GENERATOR CIRCUIT
TONE RCVR
SWITCH DRIVER
POWER
+9 VOLTS
TO PC
TO FAX
TO TLL
VCC (FROM SW1-6)

Fig. 1

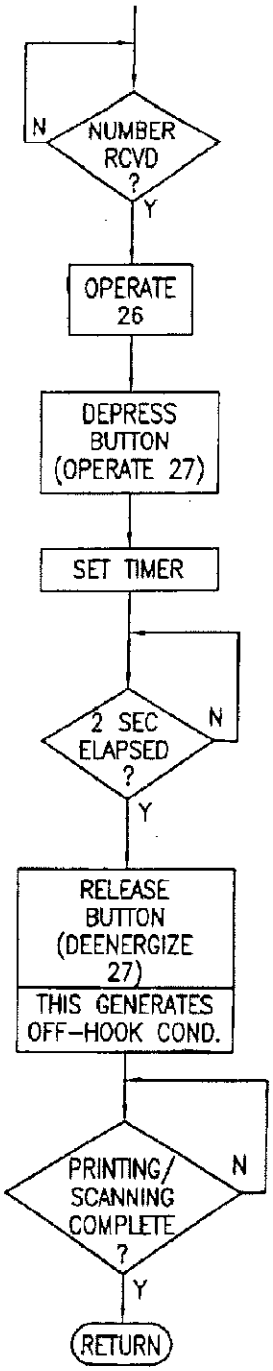
NUMBER RCVD ?
N
Y
OPERATE 26
DEPRESS BUTTON (OPERATE 27)
SET TIMER
2 SEC ELAPSED ?
N
Y
RELEASE BUTTON (DEENERGIZE 27)
THIS GENERATES OFF-HOOK COND.
PRINTING/ SCANNING COMPLETE ?
N
Y
RETURN

Fig. 1a

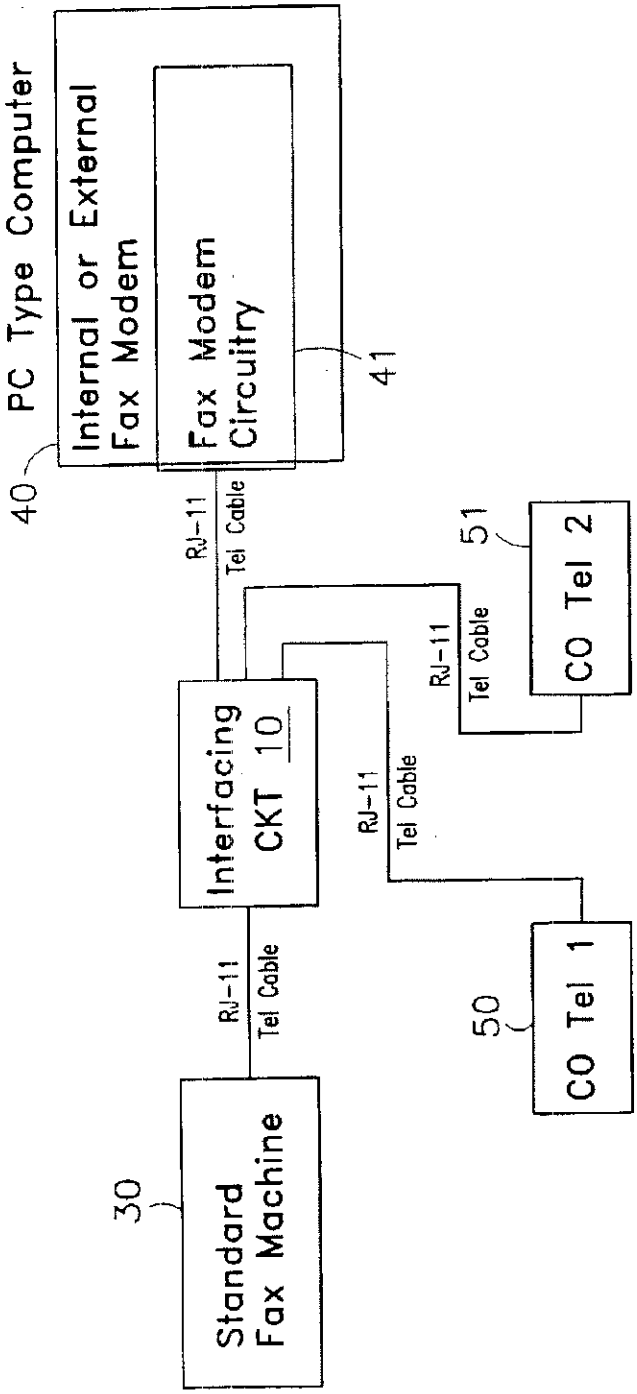
PC Type Computer
Internal or External Fax Modem
Fax Modem Circuitry
40
41
RJ-11
Tel Cable
Interfacing CKT 10
RJ-11
Tel Cable
Standard Fax Machine
30
RJ-11
Tel Cable
CO Tel 1
50
RJ-11
Tel Cable
CO Tel 2
51

Fig. 2a

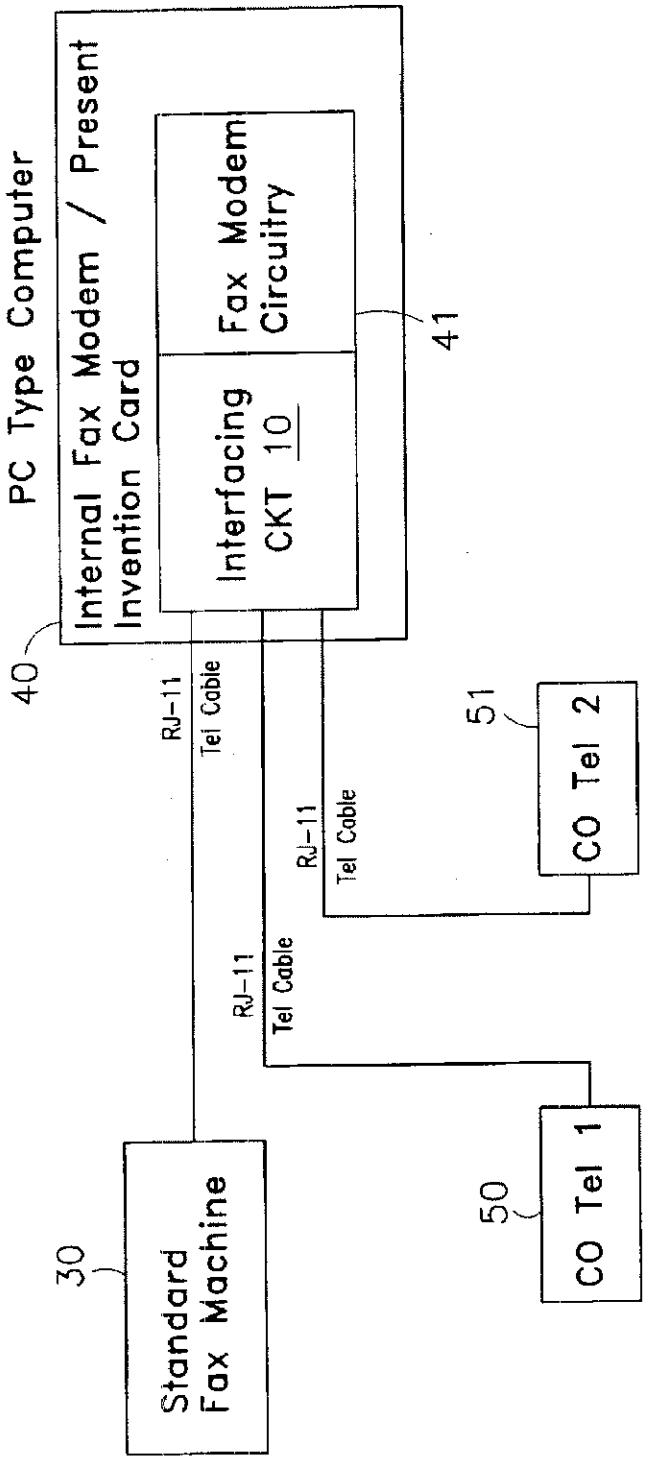
PC Type Computer
Internal Fax Modem / Present Invention Card
Interfacing CKT 10
Fax Modem Circuitry
40
41
RJ-11
Tel Cable
RJ-11
Tel Cable
RJ-11
Tel Cable
51
CO Tel 2
50
CO Tel 1
30
Standard Fax Machine

Fig. 2b

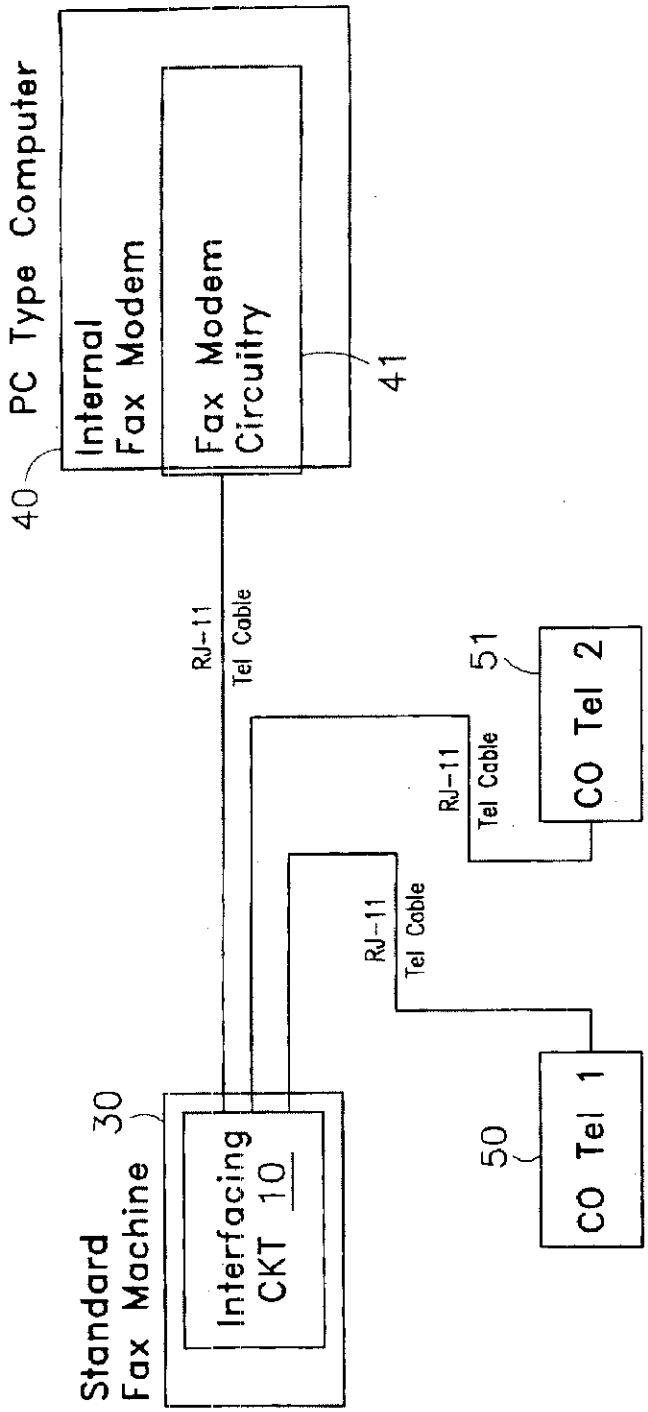
PC Type Computer
Internal Fax Modem
Fax Modem Circuitry
40
41
RJ-11
Tel Cable
RJ-11
Tel Cable
RJ-11
Tel Cable
51
CO Tel 2
50
CO Tel 1
Standard Fax Machine
30
Interfacing CKT 10

Fig. 2c

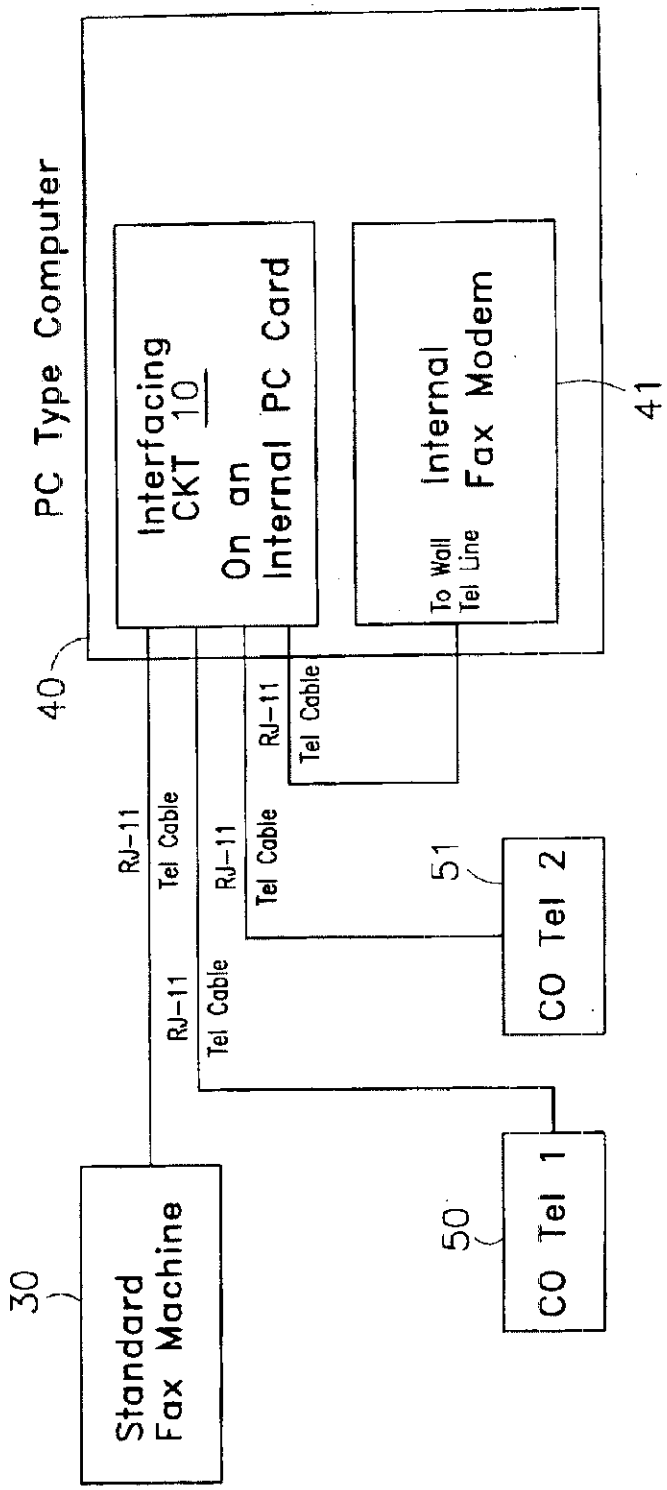
PC Type Computer
Interfacing CKT 10 On an Internal PC Card
Internal Fax Modem
To Wall Tel Line
41
40
RJ-11
Tel Cable
RJ-11
Tel Cable
RJ-11
Tel Cable
RJ-11
Tel Cable
51
CO Tel 2
50
CO Tel 1
30
Standard Fax Machine

Fig. 2d

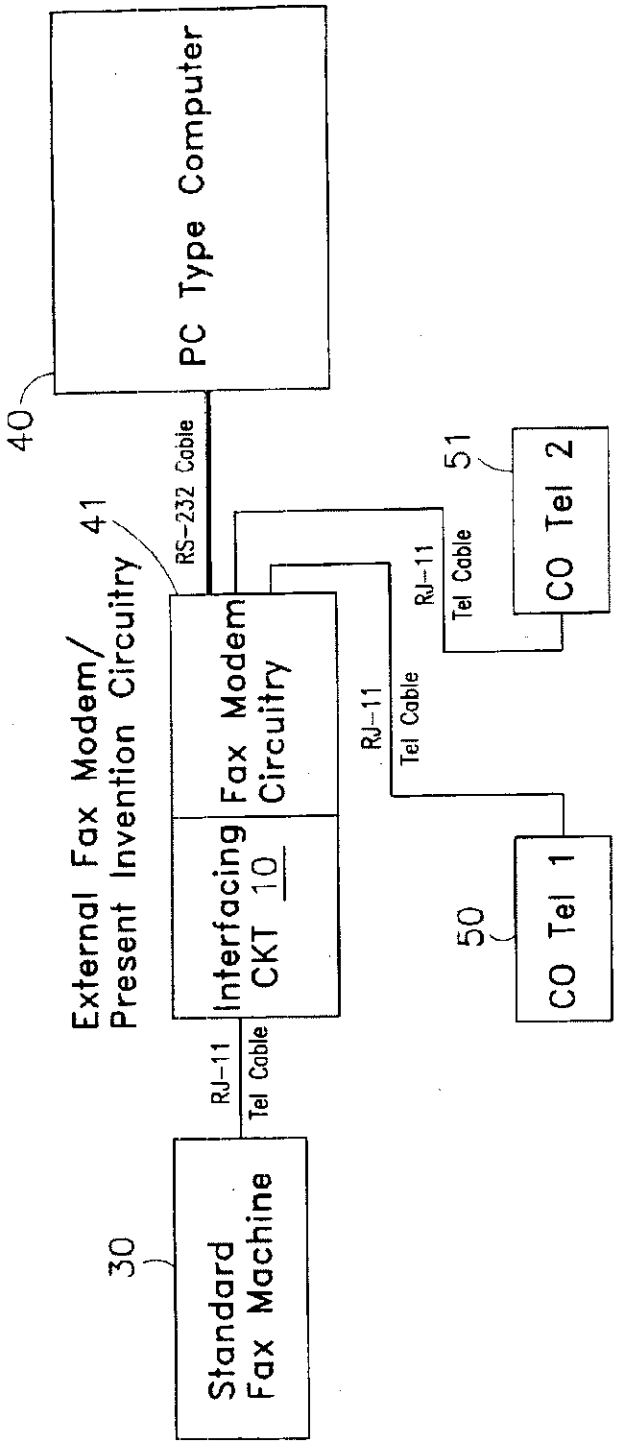
PC Type Computer
40
RS-232 Cable
41
External Fax Modem/
Present Invention Circuitry
Fax Modem
Circuitry
Interfacing
CKT 10
RJ-11
Tel Cable
RJ-11
Tel Cable
RJ-11
Tel Cable
51
CO Tel 2
50
CO Tel 1
30
Standard
Fax Machine

Fig. 2e

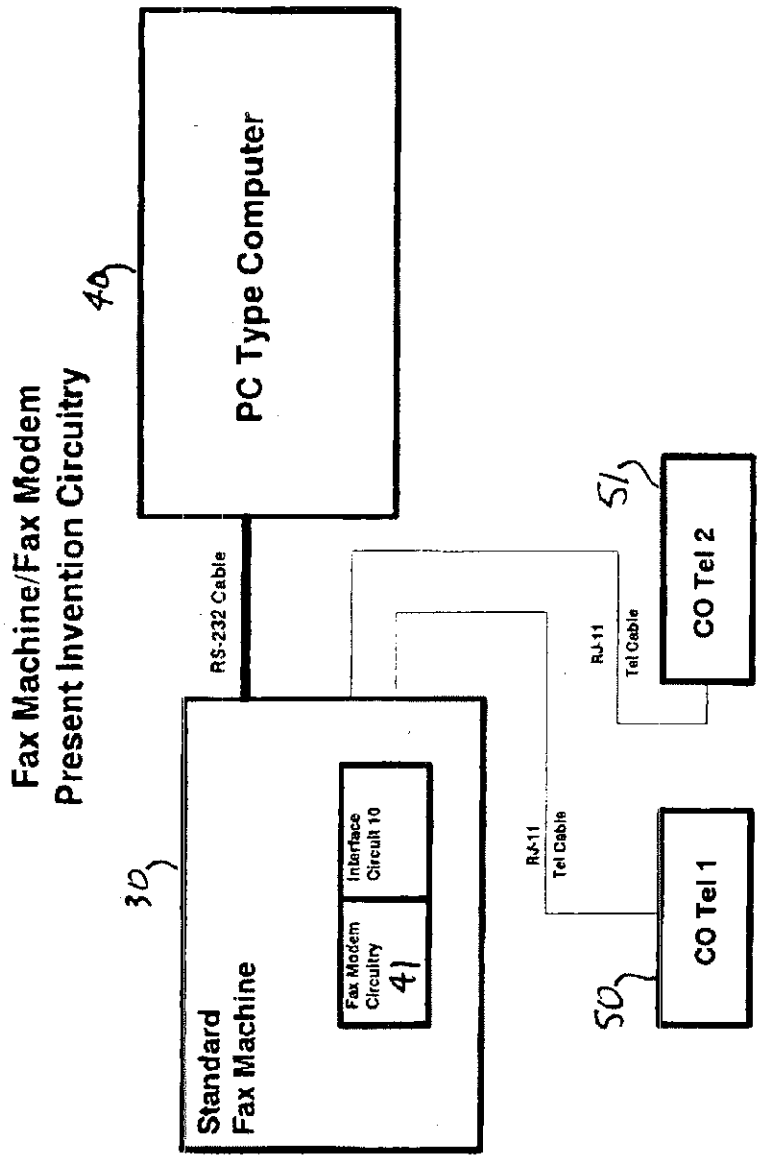
Fax Machine/Fax Modem
Present Invention Circuitry
PC Type Computer
40
RS-232 Cable
30
Standard
Fax Machine
Fax Modem
Circuitry
41
Interface
Circuit 10
RJ-11
Tel Cable
RJ-11
Tel Cable
CO Tel 1
50
CO Tel 2
51

Fig. 2f

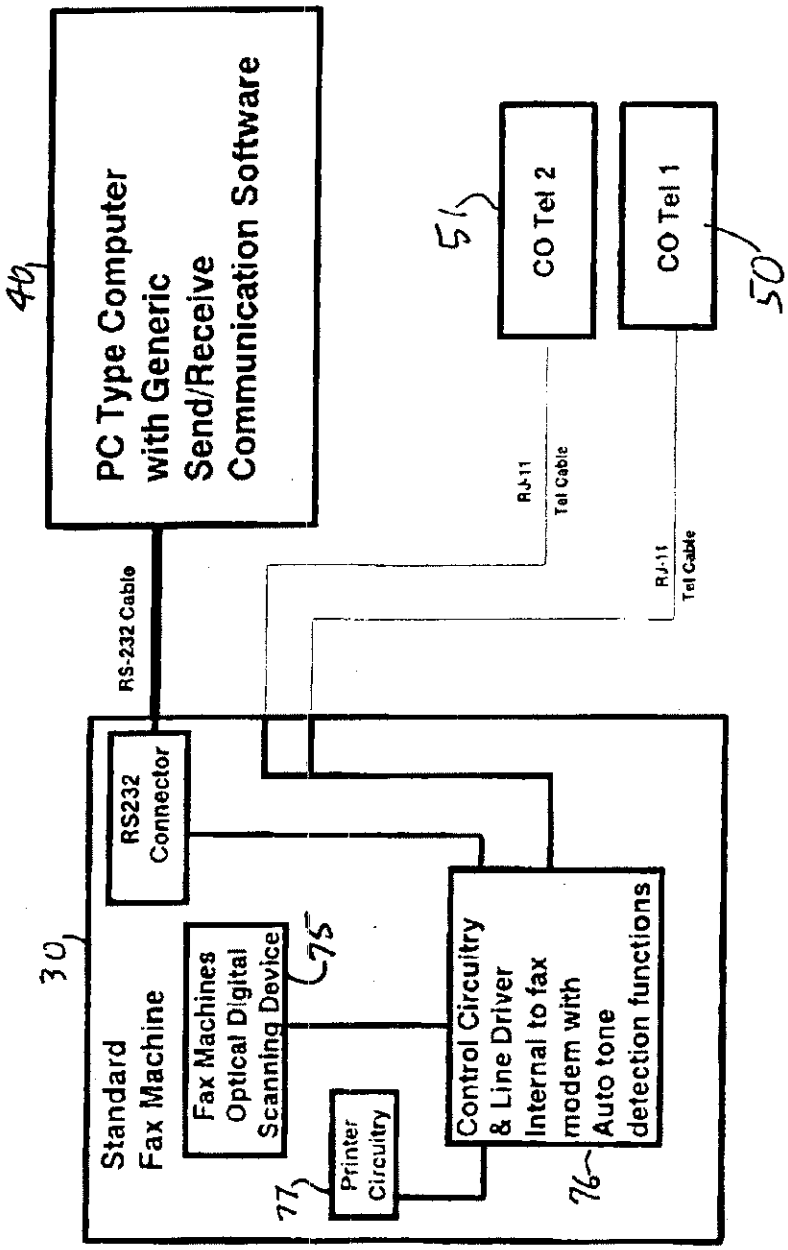
PC Type Computer
with Generic
Send/Receive
Communication Software
40
RS-232 Cable
RS232
Connector
30
Standard
Fax Machine
Fax Machines
Optical Digital
Scanning Device
75
Printer
Circuitry
77
Control Circuitry
& Line Driver
Internal to fax
modem with
Auto tone
detection functions
76
RJ-11
Tel Cable
RJ-11
Tel Cable
CO Tel 2
51
CO Tel 1
50

Fig. 2g

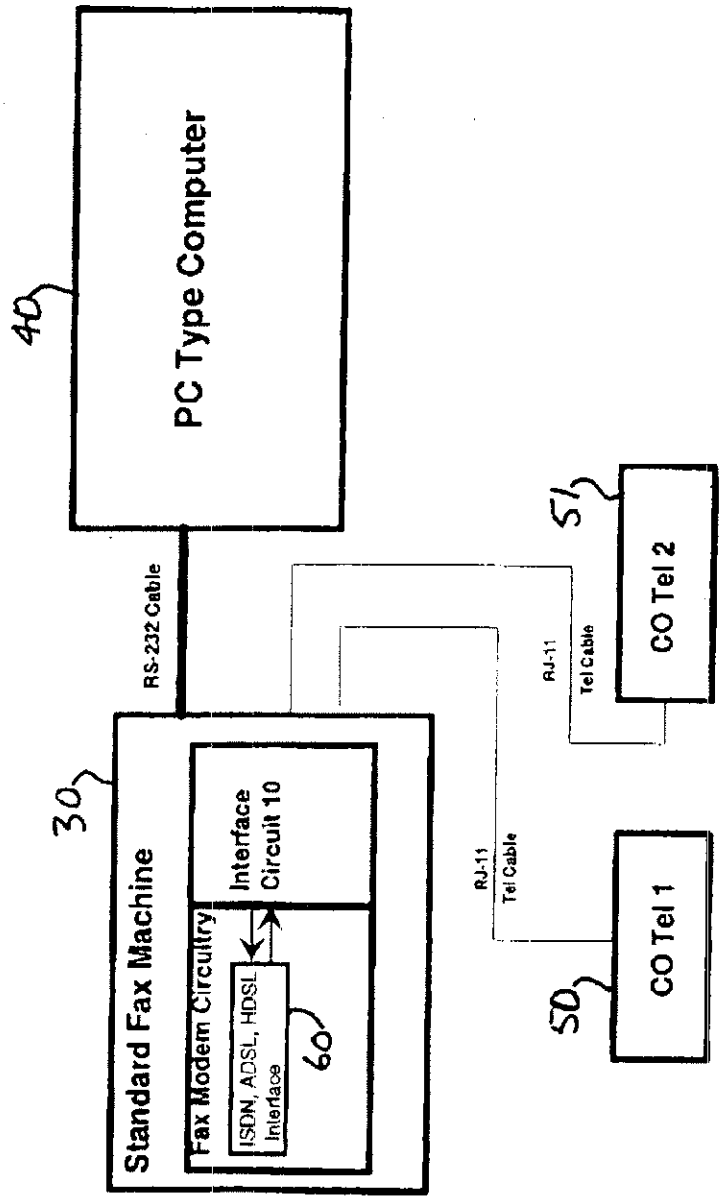
PC Type Computer
40
RS-232 Cable
Standard Fax Machine
30
Fax Modem Circuitry
Interface Circuit 10
ISDN, ADSL, HDSL Interface
60
RJ-11 Tel Cable
RJ-11 Tel Cable
CO Tel 1
50
CO Tel 2
51

Fig. 2h

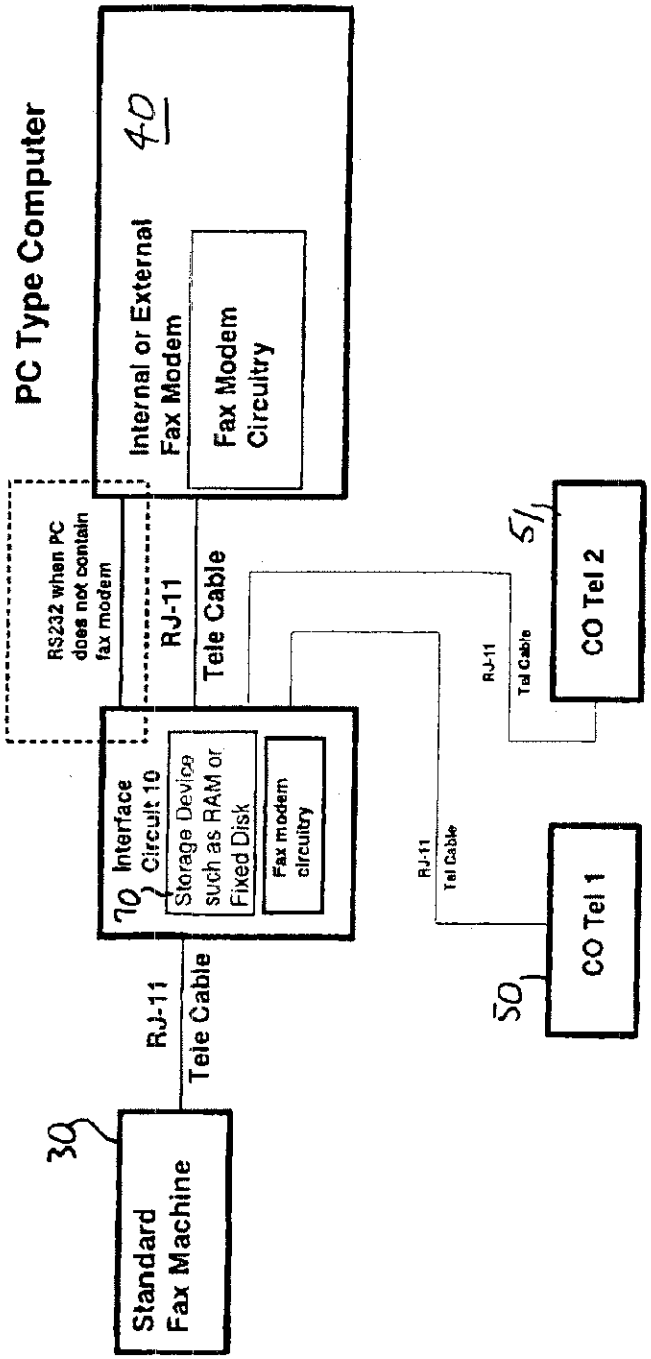
PC Type Computer
40
Internal or External Fax Modem
Fax Modem Circuitry
RS232 when PC does not contain fax modem
RJ-11
Tele Cable
70
Interface Circuit 10
Storage Device such as RAM or Fixed Disk
Fax modem circuitry
RJ-11
Tele Cable
30
Standard Fax Machine
RJ-11
Tel Cable
RJ-11
Tel Cable
51
CO Tel 2
50
CO Tel 1

Fig. 2i

INTERFACE CIRCUIT FOR UTILIZING A FACSIMILE COUPLED TO A PC AS A SCANNER OR PRINTER

This application is a continuation-in-part of application Ser. No. 08/226,278, filed Apr. 11, 1994, now U.S. Pat. No. 5,530,558.

FIELD OF THE INVENTION

The present invention relates to interfacing a facsimile with a PC and more particularly to an interface circuit of highly simplified design and including a novel ringing circuit capable of generating a sine wave of a given amplitude and frequency from a small, portable DC battery or 9V DC power supply.

BACKGROUND OF THE INVENTION

As is well known in the art, a conventional facsimile scans documents and transmits the scanned information through a modem in a standard facsimile format to a remote facsimile which receives the transmitted data by a modem and converts the transmitted data into a form for printing a document which is a replica of the document scanned by the transmitting facsimile.

Scanning and printing devices especially adapted for use with PCs (i.e. personal computers) are relatively expensive devices typically costing many hundreds of dollars to as much as several thousands of dollars for applications requiring character recognition capabilities.

It has been recognized that conventional facsimile machines may be utilized as scanners or printers for PCs. However, the interface devices presently available are both complicated and expensive and typically require a microprocessor which further tends to increase both cost and circuit complexity.

OBJECT OF THE INVENTION

It is, therefore, a principal object of the present invention to provide a circuit for interfacing a PC and a facsimile to enable the facsimile to be utilized as a scanner or a printer for a PC and to accomplish all of the objectives of a scanner or a printer in a simple straightforward manner through the use of a circuit of highly simplified design and low cost.

BRIEF DESCRIPTION OF THE INVENTION

The present invention achieves all of the above as well as other objectives through apparatus which is characterized by comprising first switch means capable of selectively coupling a PC modem and a facsimile modem to independent telephone lines when in a non-scanning/printing mode and for decoupling the PC and facsimile modems from the telephone lines and coupling these modems to one another when placed in a scanning/printing mode.

Second manually operable switch means activates a novel ringing circuit which generates a sine wave of appropriate amplitude and frequency and applies this ringing circuit to the PC modem, when used as a scanner or to the facsimile when being used as a printer, causing the PC or facsimile machine to respond to the simulated transmit request.

Release of the circuitry operating button causes the interface circuitry to apply an off-hook condition to the facsimile. Document scanning or printing is initiated by pressing the facsimile start button or the start button provided as part of the PC or by a program step integrated into the PC as part of a print mode (selecting the facsimile as the output device for printing). Transmitted data may be directly stored in a PC memory. Documents incorporating alphanumeric data may be converted by a software program incorporated into the PC.

The ring generating circuit responsive to pressing of the operating button generates a transmit request signal by converting the low voltage from a DC source into a 20 cycle sine wave of 90 volt amplitude through the employment of a pulse generating circuit coupled to phase delay means and applying phase delayed and undelayed pulses to a transistorized switching circuit for selectively applying positive DC voltage to opposing inputs of a step-up transformer which applies a boosted sinusoidal ring signal to the PC modem, the ring generating circuit generating a ringing signal of the appropriate amplitude and frequency in a highly simplified and inexpensive manner. Since operation of the ringing circuit is completed in less than two seconds, a battery, if used, will have an extremely long operating life. Alternatively, if a 9V DC power source is used the battery is not required at all.

The simple, straightforward operation of only three switches eliminates the need for complicated, expensive and typically microprocessor-based circuitry.

BRIEF DESCRIPTION OF THE FIGURES

The above, as well as other objects of the present invention, will become apparent upon reading the accompanying description and drawings in which:

FIG. **1** is a circuit diagram of the interface circuitry of the present invention which enables a PC to utilize a conventional facsimile as a sophisticated scanner or printer.

FIG. **1***a* is a flow diagram of the circuitry of FIG. **1** employing the microprocessor-based tone detecting circuit of FIG. **1**.

FIGS. **2***a*–**2***i* show simplified block diagrams of various system arrangements employing the circuitry of the present invention.

DETAILED DESCRIPTION OF THE INVENTION AND PREFERRED EMBODIMENTS THEREOF

FIG. **1** shows an interface circuit **10** embodying the principles of the present invention and being comprised of a switch assembly **SW2** which is a four-pole double-throw switch having four movable switch arms **SW2-2**, **SW2-5**, **SW2-8**, and **SW2-11**, each cooperating with a pair of stationary contacts, as shown. For example, and for simplicity, note that switch arms **SW2-2** is switchable between stationary contacts **SW2-1** and **SW2-3**.

Movable switch arms **SW2-2**, **SW2-5**, **SW2-8** and **SW2-11** are all ganged to operate in unison as shown by common operating button **B2** coupled to the switch arms through a linkage arm **LA2** shown in schematic fashion as a dotted line. The switch is designed so that the switch arms are retained in the positions to which they are moved.

The switch arms are arranged in pairs, switch arms **SW2-2** and **SW2-5** selectively coupling a modem of a PC (not shown for purposes of simplicity) to either a first telephone line #1 through jumper **JP3** or directly to a local facsimile machine (not shown for purposes of simplicity) through a jumper terminal **JP2**.

In a similar fashion, a pair of switch arms **SW2-8** and **SW2-11** selectively couple the local facsimile machine through jumper **JP2** to either a separate telephone line #2 (through jumper **JP4**) or to the modem of the PC.

A double-pole single-throw switch SW3 is provided to couple either the local facsimile machine or the PC modem to a single telephone line or alternatively, disconnects the PC modem and facsimile machine from the common telephone line. For example, in applications where both the local facsimile and the PC each have an independent, dedicated telephone line, switch SW3 remains open. In applications where only a single telephone line is provided, both PC and the local facsimile may share the single telephone line by gaining access thereto in a staggered manner.

Switch SW1 which is a three-pole, double-throw switch, comprises three movable switch arms SW1-1, SW1-4 and SW1-7, each movable switch arm cooperating with a pair of stationary switch arms.

Movable switch arm SW1-1 selectively couples the output terminal of the pair of secondary windings W2 of a step-up transformer TR1 either to stationary terminal SW1-2, which isolates the output of the transformer TR1 from the operating circuitry, or stationary contact SW1-3 which couples the secondary winding W2 of transformer TR1 through movable switch arm SW1-7 and stationary contact SW1-9 simultaneously to stationary contacts SW2-6 and SW2-12 of four-pole double-throw switch SW2 for simultaneous connection to the PC modem and the local facsimile, when switch arms SW2-5 and SW2-11 respectively engage stationary contacts SW2-6 and SW2-12.

Movable switch arm SW1-4 selectively couples a small nine volt (9V) DC source (through jumper J5) to either stationary switch arm SW1-5 for coupling nine volt (9V) DC to a current generator circuit 12 or alternatively coupling nine volt (9V) DC to stationary terminal SW1-6 which in turn provides DC power to the nine volt (9V) ring generator circuit arranged within the dotted region as shown.

Current generator circuit 12 is comprised of resistors R1, R2 and R5, transistors Q1 and Q6, diode D2 and LED-type diode D3 which are connected in the manner shown to provide a constant current which simulates an off-hook signal, utilized in the manner to be more fully described hereinbelow. Resistor R2 serves as a current limiting resistor. LED D3 lights to denote operation of the constant current generator.

Ring generator circuit 14, which is utilized to generate a 20 Hz sine wave of a 90 volt amplitude, comprises a 555-type timing circuit 16 which, when activated by a nine volt DC input, applied to timer 16 through terminal VCC and resistor R13, provides a pulse train of equal width, positive-going pulses at a pulse rate of approximately 20 Hz at its output 16*a*.

The pulse train generated by the 555 timer 16 is simultaneously applied to the input of inverter U1A whose output is simultaneously coupled to the base electrodes of transistors Q2 and Q4, through resistor R6 and through inverter U1B and resistor R9.

The pulse train, as was set forth hereinabove, is simultaneously coupled to the –T input of a one-shot multivibrator operating as a phase delay circuit and whose Q output is coupled to the input of inverter U1E. The Q output of one-shot multivibrator U2A provides a phase delayed pulse which is coupled through the output of inverter U1E simultaneously to the base of transistor Q5 through resistor R8 and to the base of transistor Q3 through inverter U1F and resistor R7. Transistors Q2–Q5 and resistors R6–R9, together with resistor RIO, form a full bridge switching circuit which is powered by the nine volt (9V) DC source applied to the terminal VCC to provide drive current sufficient to drive transformer TR1, comprised of a pair of primary windings W1 and a pair of secondary windings W2, to generate a sine wave output. The pair of primary windings W1 and secondary windings W2 are coupled in parallel and the windings are arranged to provide a step-up transformer to magnify the input voltage preferably by ten to one (10:1), generating the desired output voltage which, in the present application, is a 20 Hz output of 90 volt amplitude with 15 mils of current from a nine volt (9V) DC, 150 mils current source. If desired, the frequency, amplitude and current of the circuit can be changed by selecting different component values for the passive elements. The component values chosen in the present invention have been selected to generate a signal which reproduces a standard bell ring signal employed in a conventional transmission between remote facsimile machines. The branch circuits BC1 and BC2 of the bridge circuit are alternately rendered conductive to alternately apply a positive voltage to opposing inputs of the input windings W1 for generating a sine wave from the positive-going pulses produced by timer circuit 16. The two input windings W1 are coupled in parallel as are the output windings W2.

The bell ring signal is selectively supplied through movable switch arm SW1-1 of the three-pole, double-throw switch SW1 described hereinabove.

The operation of the interface circuit of the present invention is as follows:

Assuming that the local facsimile is desired to be operated in combination with the PC and to function as a scanner, the switch SW2 is moved from the normal position, in which the movable switch arms are shown in solid line fashion, to the dotted line position simultaneously disconnecting the PC modem and the local facsimile from the telephone lines and directly connecting the PC receive line, PCR1 to ground and the PC transmit line PCT1 directly to stationary contact SW1-9. The local facsimile transmit line FXT2 is directly connected to ground and the facsimile receive line FXR2 is connected in common with line PCT1 to stationary contact SW1-9 of switch SW1. Switch SW3 may be either in the open or the closed position when switch SW2 is moved to the scan mode.

Switch SW1 is operated by pressing button B1 which is ganged to the movable switch arms SW1-1, SW1-4 and SW1-7 by a common linkage arm represented schematically by dotted line LA1. A biasing member or spring SWP1 normally biases the movable switch arms to the solid line position shown in Figure. By depressing switch button B1, the switch arms SW1-1, SW1-4 and SW1-7 are simultaneously moved to the dotted line positions shown in FIG. 1. Button B1 is maintained in the depressed position for a period preferably between one and two seconds. In the dotted line position, the nine volt (9V) DC source is coupled through switch arm SW1-4 and stationary terminal SW1-6 to the VCC terminals of ring generator circuit 14, producing a 20 Hz sine wave of 90 volt amplitude and a current of 15 mils at the secondary windings W2, which is applied to the PC line PCT1 through SW1-1, SW1-3, SW1-7, SW1-9, 126, SW2-6 and SW2-5, simulating what the PC believes is a request by a "remote" facsimile to transmit data thereto. The PC, which may be any type of computer (including but not limited to an Apple Macintosh, IBM PC, PCAT or PCXT) is provided with either an internal or external group III facsimile interface board, and shifts to a receive mode for receiving what appears to the PC to be a facsimile transmission from a "remote" facsimile machine.

After holding the button B1 depressed for a time which need not exceed approximately two seconds, button B1 is

released causing the nine volt (9V) DC source to be coupled to input **12***a* of current generator circuit **12**, which circuit applies the constant current to the facsimile receive line FXR2 to create what appears to the facsimile machine to be an off-hook condition. Simultaneously therewith, LED D3 lights indicating that the current generator circuit is presently in operation.

The local facsimile machine recognizes the constant current as representative of an off-hook condition preparing the local facsimile machine for transmission.

Thereafter, the conventional start button of the facsimile machine (not shown for purposes of simplicity) is pressed to start communication of the data scanned by the local facsimile machine from a document (or documents) placed within the facsimile machine document input (also not shown for purposes of simplicity).

The facsimile machine may be either a group I, group II, or group III machine, although optimum document resolution can be obtained through the use of a group III facsimile machine.

The conventional PC can store the transmitted data in its memory as a "picture" the resolution of the picture being 200 by 100 pixels for old facsimile machines, 200 by 200 pixels for standard facsimile machines and 400 by 400 pixels for new facsimile machines. Alternatively, a conventional OCR software package such as, for example, a CAERE OCR program available from Bitsoftware may be employed. Many alternative OCR software packages may be utilized to convert the "picture" transmitted by the facsimile machine to binary character form for word processing use or the like.

Operation of the facsimile machine in combination with the PC wherein the facsimile machine operates as a printer is as follows:

The ring generating circuit is not required to be operated in this mode and in applications where a facsimile machine is interfaced with a PC for use only as a printer, the ring generating circuit and the cooperating spring bias switch may be eliminated.

Switch SW2 shown in FIG. **1** is moved from the solid line to the dotted line position decoupling the PC and facsimile machine from the telephone lines and coupling the PC and facsimile machine together.

Switch SW1 is operated to power the current generator circuit **12** causing both the PC and the facsimile machine to see an off-hook condition.

The computer (PC) is operated either by providing a switch such as a push button switch (not shown for purposes of simplicity) to enter into a standard protocol with the facsimile machine and thereafter to transmit information in standard facsimile machine format. The facsimile machine senses that it is communicating with a remote facsimile machine and creates a document in accordance with the data received from the PC in "pixel" form. The PC may be provided with a standard program having a print mode in which the facsimile machine is identified in the printing routine as the specific output device being utilized during such a print mode. Upon completion of printing mode, switch SW2 may be returned to the solid line position decoupling the PC from the facsimile machine and recoupling the PC and facsimile modems to their associated telephone lines.

FIGS. **2***a*–**2***h* show various arrangements in which the present invention may be utilized.

Noting, for example, FIG. **2***a*, the circuitry **10** of the present invention is coupled between a standard facsimile machine **30**, a PC-type computer **40** having a facsimile modem circuitry **41** and central office telephone lines **50** and **51**. In the arrangement shown in FIG. **2***a*, the facsimile modem circuitry may be either internal or external to the PC-type computer **40**.

FIG. **2***b* shows another alternative embodiment in which the circuitry of the present invention is incorporated into the PC-type computer and may be arranged on its own printed wiring board or on a printed wiring board which is common to the circuitry **10** of the present invention and the facsimile modem circuitry **41**. The arrangement of FIG. **2***b* is otherwise the same as that shown in FIG. **2***a*. The circuit **10** shown in FIG. **2***b* is provided with three RJ-11 telephone cable connections for respective connection with the facsimile machine **30** and telephone lines **50** and **51**. If only one additional telephone cable is provided, the standard facsimile machine **40** and the internal facsimile modem **41** may share that cable.

FIG. **2***c* shows another alternative arrangement in which the circuitry **10** of the present invention is integrated into the standard facsimile machine **30**. The operation of the arrangement of FIG. **2***c* is otherwise similar to those shown in FIGS. **2***a* and **2***b*.

FIG. **2***d* shows an arrangement in which the circuitry **10** of the present invention is mounted upon its own printed wiring board and is arranged within the PC-type computer **40** and is electrically connected to the internal facsimile modem **41** by an external RJ-11 cable as shown. The operation is otherwise the same as the embodiments of FIGS. **2***a*–**2***c* described hereinabove.

The circuitry **10** of the present invention may alternatively be placed upon a printed circuit card of approximately a credit card size for insertion in a bus slot provided in present-day PCs enabling the circuit on the printed circuit card, inserted into a slot provided along the exterior of the PC, to be coupled to a PCMCIA bus which is an additional bus that may be addressed by the PC.

FIG. **2***e* shows still another arrangement in which the PC-type computer **40** is coupled to external facsimile modem circuitry **41**, for example, through an RS-232 cable. The facsimile machine interfaces to the external facsimile modem **41** through circuitry **10** by way of an RJ-11 telephone cable. When in the normal mode of operation, circuitry **10** interfaces central office telephone lines **50** and **51** through the RJ-11 telephone cables, as shown. Cable **50** may be employed for standard facsimile machine telephone communications while telephone line **51** is used for the external facsimile modem circuitry. If only one central office telephone line is available, line **50** may be shared in the manner previously described.

FIG. **2***f* shows an arrangement in which interface circuit **10** is internal to the facsimile machine. PC-type computer **40** is coupled to the facsimile modem circuitry **41** and interface circuit **10** through an RS-232 cable. When in the normal mode of operation, circuitry **10** interfaces the central office telephone lines **50** and **51** through RJ-11 telephone cables, as shown. Cable **50** may be employed for standard facsimile machine telephone communications while telephone line **51** is used for the external facsimile modem circuitry. If only one central office telephone line is available, line **50**, for example, may be shared in the manner previously described. The arrangement of FIG. **2***f* is used with PC's which do not have a fax modem installed. When interface **10** is installed internal to the facsimile, the fax modem of the fax machine incorporates many of the functions of circuit **10**, through integration of the already existing circuitry components of the fax modem.

The present invention may be employed with telephone systems having digital signal processing. FIG. 2*h*, which is similar to FIG. 2*f*, and which shows like circuits designated with like numerals, further includes an interface **60** for digital signal processing. The send and receive options required for scanning and printing are provided by interface **60**, which may, for example, be a chip set such as PEB 2091 N-V4.4 and EPB 2186 N-V4.4, manufactured by Siemens. Any other chip set having similar operating characteristics may be employed. As other digital signal formats come into use, such as ADSL (Asymmetric Digital Subscriber Line) HDSL (High Bit Rate Digital Subscriber Line), or the like, a chip set for handling such formats may be substituted for interface **60**.

As shown in FIG. 2*i*, a RAM and/or Fixed Disk **70** may be incorporated into the interface **10**, integrated with a fax modem **30** to allow for the capture of images or documents for later transfer into the PC **40** or the facsimile machine **30**, or for image enhancement within the interface configuration **10**. The addition of the data storage feature is particularly desirable for the fax machine or fax modem when they are in normal fax send or receive modes.

Optionally, the data storage feature is desirable for field application usage where information may be downloaded from a PC and stored in interface **10** for later transfer to a facsimile machine or a PC. Storage would be retained in this instance by battery backup incorporated in the RAM memory **70**. Battery backup is not necessary for fixed disk storage.

FIG. 2*j* shows an arrangement for automated scanning and printing functions between a fax modem and a fax machine.

As represented in FIGS. 2*a*–2*f*, in order to activate an automated process for scanning or printing, the ring circuit **4** (FIG. **1**) interfaces with the Tip and Ring features of the fax modem or fax machine. This is dependent on keying in a code on the fax keypad, such as ## or #* or any other predetermined code in order to respectively identify the scanning and printing functions. Interface **10** detects the tones generated by the inserted code (at the tone receiver **25** and generates a ring signal. The ring signal is detected and interpreted by the ring detect circuit of the fax modem or the fax machine. The fax modem or fax machine then generates receive signals or tones which indicate a connection. The fax modem or fax machine commences the scanning of the fax image or print cycle.

By depressing a predetermined code such as ## on the fax machine key pad, the tone detector circuit **25** interprets this code, enabling a control circuit to activate first (**26**) and second (**27**) relay means. Relay **26** disconnects the fax machine and the fax modem (connected to the PC) from the Central Office terminal lines. Relay **27**, then connects 9V to the ring generator circuit **14** causing a sinusoidal ring signal of a predetermined frequency and amplitude to be generated to the PC fax modem. The PC fax modem answers and starts the scanning process from the fax machine to the PC.

A communication program stored in the PC allows the code #* (for example) to be entered, generating the tone signal from the fax modem. The tone detector circuit in the interface **10** interprets this code, enabling a control circuit to activate first (**26**) and second (**27**) relay means. Relay **26** disconnects the fax machine and the fax modem (connected to the PC) from the Central Office terminal lines. Relay **27**, then connects 9V to the ring generator circuit **14** causing a sinusoidal ring signal of a predetermined frequency and amplitude to be generated to the fax machine. The fax machine answers and starts the printing process form the PC fax modem.

The switch version does not require the ## or #* or any other code, but activates the automated scanning/printing by pressing the ringer button B2.

The provision of the scan and print functions internal to the facsimile machine may also be accomplished by utilizing the analog output of the optical scanning circuit **75** of the facsimile machine (FIG. 2*g*). The analog signals are processed by the control/modem circuitry **76** where they are converted into a digital serial signal and then transmitted through the RS 232 sending interconnect port, the signal is then received by an RS232 connector at the PC. The aforementioned procedure utilizes unused signal lines which are available on most modem chips such as the Rockwell chip series.

A send and receive driver software package then implements the following action. The receive driver software accepts the digital image for storage or processing as appropriate. This send/receive driver communications software package also has the ability to send a digital image to the facsimile machine for printing purposes. The facsimile machine's control/modem circuitry then processed by the print driver **77** for printing. This linkage method for scanning and printing utilizing a fax machine is particularly useful for a computer without a fax modem. Any available send/receive communications software package is acceptable.

The commands of ## or #* for sending and receiving are still appropriate for this application although any other desired commands may be selected.

For the automated operation, the circuitry **10** of FIG. **1** is provided with device **25** which includes an automatic tone detector circuit for receiving a unique number dialed by either the facsimile machine or the PC modem. Upon recognition of the unique number, as set forth above or by generation using other techniques, the tone receiver operates a driver circuit **26** for operating switch SW2 to decouple the PC and the facsimile machine from their associated telephone lines and for connecting the PC to the facsimile machine. Driver circuit **26** may be a relay or its equivalent for operating an armature (not shown) to move the switch arms between their two operating states. Driver unit **27** which likewise may be a relay or its equivalent, operates the switch SW1 to the position energizing the ringing circuit **14**. A timer is set and when two seconds elapses, unit **27** is deenergized causing the off-hook signal to be generated by current generator circuit **12** through the release of the operating button. When printing or scanning is complete, the tone receiver unit is reset. A simplified flow diagram of the aforementioned operation is shown in FIG. **1***a*.

The circuitry of the present invention is highly simplified in design and provides effective communication between the PC and local facsimile machine enabling the local facsimile machine to provide the dual functions of operating independently for transmission or reception to remote facsimile machines as well as functioning as a scanner or printer with a local PC. The circuitry of the present invention provides all the necessary signal conditions which lead the PC and local facsimile machine to believe that they are communicating with one another over a telephone line. The facsimile machine, although operating in its normal fashion, functions very effectively as a scanner or printer as and when needed and provides a scanning or printing capability at a mere fraction of the cost of conventional scanners or printers.

Simple switching of SW2 returns the PC and facsimile machine to normal use.

The novel ring circuit provides the required ring signal which is conventional in present-day facsimile transmission

application through the employment of an inexpensive, low voltage, DC battery or 9V power source and, through the operation of two switches incorporated in the novel interface circuitry of the present invention, followed by operation of the facsimile start switch, provides an interface circuit which is extremely easy to use and which eliminates the need for more complicated and expensive microprocessor-based devices.

A latitude of modification, change and substitution is intended in the foregoing disclosure, and in some instances, some features of the invention will be employed without a corresponding use of other features. Accordingly, it is appropriate that the appended claims be construed broadly and in a manner consistent with the spirit and scope of the invention herein described.

What is claimed is:

1. A method of creating a scanning capability from a facsimile machine to a computer, with scanned image digital data signals transmitted through a bi-directional connection via a passive link between the facsimile machine and the computer, comprising the steps of:

by-passing or isolating the facsimile machine and the computer from the public network telephone line;

coupling the facsimile machine to the computer;

conditioning the computer to receive digital facsimile signals representing data on a scanned document; and

conditioning the facsimile machine to transmit digital signals representing data on a scanned document to the computer, said computer being equipped with send/receive driver communications software enabling the reception of scanned image signals from the facsimile machine, said transmitted digital facsimile signals being received directly into the computer through the bi-directional direct connection via the passive link, thereafter, said computer processing the received digital facsimile signals of the scanned document as needed.

2. The method of claim 1 to create a scanning capability through a bi-directional direct connection via a passive link between a facsimile machine and a computer by transfer of scanned image data signals from the facsimile machine through said connection, said facsimile machine by-passing or isolated from the public network telephone line, and connected to an appropriate receiving port of a computer or other office product capable of receiving and processing said signals.

3. The method of claim 1, including transferring a parallel data source signal of a scanned image from said facsimile machine to said computer.

4. The method of claim 1, including transferring a digital serial data source signal of a scanned image from said facsimile machine to said computer.

5. The method of claim 1 further comprising optically recognizing the scanned data within the computer and converting the scanned data into character codes within the computer, said computer being equipped with Optical Character Recognition Software.

6. A method of creating a scanning capability from a facsimile machine to a computer equipped with a modem, with scanned image data signals transferred through a bi-directional direct connection via a passive link between the facsimile machine and the computer, comprising the steps of:

by-passing or isolating the facsimile machine and the computer from the public network telephone line;

coupling the facsimile to the computer;

conditioning the computer to receive facsimile signals representing data on a scanned document; and

conditioning the facsimile machine to transmit signals representing data on a scanned document to the computer, said computer being equipped with send/receive driver communications software enabling the reception of scanned image signals from the facsimile machine, said transmitted facsimile signals being received through the bi-directional direct connection via the passive link to the computer modem, thereafter, said computer processing the received facsimile signals of the scanned document as needed.

7. A method of making a facsimile machine operable as a scanner and printer for a personal computer, by transferring digital data through a bi-directional direct connection via a passive link between the facsimile machine and the computer, each of the facsimile machine and personal computer for communicating normally using at least one public network telephone line, comprising the steps of:

configuring the facsimile machine to communicate with the personal computer using a digital connector port of the facsimile machine and personal computer, with both the facsimile machine and personal computer isolated from said at least one public network telephone line;

arranging the facsimile machine to be in a digital connection mode; and

shifting the personal computer to a connected mode for sending or receiving digital signals through the bi-directional direct connection via the passive link for scanning and printing between the computer and the facsimile machine, in a facsimile format, using the digital connector port of the personal computer, said computer being equipped with send/receive driver communications software enabling the transfer of the scanning and printing signals between the computer and the facsimile machine.

8. The method of claim 7 including using RS 232 connector ports to interface between the facsimile machine and the personal computer.

9. The method of claim 7 including using parallel connector ports to interface between the facsimile machine and the personal computer.

10. The method of claim 7, using RS 232, parallel or other suitable digital port type connectors to interface between said facsimile machine and said computer.

11. The method of claim 7 further comprising optically recognizing the scanned data within the computer and converting the scanned data into character codes within the computer, said computer being equipped with Optical Character Recognition Software.

12. A method of using a facsimile machine as a scanner and printer by transferring data signals through a bi-directional direct connection via a passive link between the facsimile machine and the personal computer, each of the facsimile machine and personal computer for communicating using telephone types of circuits, said facsimile machine and computer being isolated from the public telephone network, comprising the steps of:

(a) configuring the facsimile machine to communicate with the personal computer using the facsimile machine, and by-passing or isolating the facsimile machine and computer from the public telephone network;

(b) arranging the facsimile machine to be in a simulated off-hook condition, or connection mode; and

(c) shifting the personal computer to an off-hook condition, or connection mode for sending or receiving signals in facsimile formats through the bi-directional direct connection via the passive link between the personal computer and the facsimile machine;

said computer being equipped with send/receive driver communications software enabling the transfer of the scanning and printing signals between the computer and the facsimile machine.

13. The method of claim **12** including using serial data transmissions for both scanning and printing through the bi-directional direct connection via the passive link between the facsimile machine and the personal computer.

14. The method of claim **12** including using parallel data transmissions for both scanning and printing through the bi-directional direct connection via the passive link between the facsimile machine and the personal computer.

15. The method of claim **12** including using analog data transmissions for both scanning and printing through the bi-directional direct connection via the passive link between the facsimile machine and the personal computer.

16. The method of claim **12** using analog or digital serial, parallel data transmissions, for both scanning and printing through the bi-directional direct connection via the passive link, between the facsimile machine and the personal computer.

17. The method of claim **12** further comprising optically recognizing the scanned data within the computer and converting the scanned data into character codes within the computer, said computer being equipped with Optical Character Recognition Software.

18. A method of using a facsimile machine with a computer, one or both of which being connected to a telephone line such that said facsimile machine operates as a scanning and printing device for the computer when isolated from the telephone line comprising the steps of:

(a) coupling the facsimile machine to the computer through a bi-directional direct connection via a passive link;

(b) generating a signal to simulate an off-hook condition or connection mode providing a direct path whereby the facsimile machine is conditioned to transmit or receive signals through the bi-directional direction via the passive link to the computer;

(c) generating a facsimile machine signal whereby the computer is conditioned to receive signals representing data on a scanned document; and

(d) generating a computer signal whereby the facsimile machine is conditioned to receive signals representing data on a document to be printed;

said computer being equipped with send/receive driver communications software enabling the reception of scanned image signals from the facsimile machine or the sending of computer data to the facsimile machine for printing.

19. A method of using a facsimile machine with a computer, one or both of which being connected to a telephone line such that said facsimile machine operates as a printing device for the computer when isolated from the telephone line, comprising the steps of:

(a) coupling the facsimile machine to the computer through a bi-directional direct connection via a passive link, which enables transfer of digital image signals in both directions;

(b) generating a signal representative of a facsimile machine communications signals, whereby the computer is conditioned to transmit signals representing data on a document to be printed; and

(c) generating a signal to simulate an off-hook condition or connection mode providing a direct path whereby the facsimile machine is conditioned to receive signals through the bi-directional direct connection via the passive link representing data from the computer of a document to be printed.

20. A method of making a facsimile machine operable as a scanner and printer for a computer, each of the facsimile machine and computer for communicating normally using at least one public network telephone line, comprising the steps of:

(a) configuring the facsimile machine to communicate with the personal computer through a bi-directional direct connection via a passive link between a digital connector port on the facsimile machine and a digital connector port on the computer, with both the facsimile machine and computer by-passing or isolated from said at least one public network telephone line;

(b) arranging the facsimile machine to send or receive digital data signals; and

(c) coupling the digital data signals through the bi-directional direct connection via the passive link between the personal computer and the facsimile machine;

said computer being equipped with send/receive driver communications software enabling the reception of scanned image signals from the facsimile machine or the sending of computer data to the facsimile machine for printing.

* * * * *

UNITED STATES PATENT AND TRADEMARK OFFICE

CERTIFICATE OF CORRECTION

PATENT NO. : 6,894,811 B1
APPLICATION NO. : 08/669056
DATED : May 17, 2005
INVENTOR(S) : Bruce Nachman

It is certified that error appears in the above-identified patent and that said Letters Patent is hereby corrected as shown below:

Drawings

Figure 2j was resubmitted by hand to the examiner at the Interview of 4/14/04, however, it was not incorporated into the issued patent. An additional copy is attached herewith as 4 of 4.

The Specification correction now requires:

Column 8, line 21, after "circuitry" insert --76 receives the digital image and it is--

Claim 1, Column 9, line 19, change "a bi-directional connection" to --a bi-directional --direct-- connection--

Claim 18, Column 11, line 43, change "direction" to --direct connection--

Signed and Sealed this

Tenth Day of June, 2008

JON W. DUDAS
Director of the United States Patent and Trademark Office

UNITED STATES PATENT AND TRADEMARK OFFICE

CERTIFICATE OF CORRECTION

PATENT NO. : 6,894,811 B1 Page 2 of 2
APPLICATION NO. : 08/669056
DATED : May 17, 2005
INVENTOR(S) : Bruce Nachman

It is certified that error appears in the above-identified patent and that said Letters Patent is hereby corrected as shown below:

In Drawings insert as Page 12 of 12

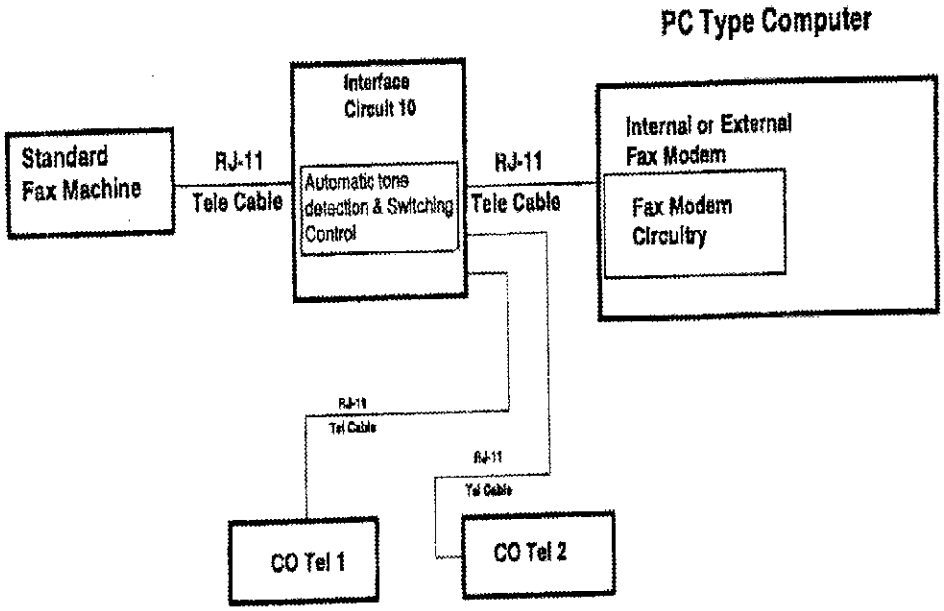

Fig. 2J

US006894811C1

(12) EX PARTE REEXAMINATION CERTIFICATE (9159th)

United States Patent

Nachman et al.

(10) Number: US 6,894,811 C1

(45) Certificate Issued: Jul. 31, 2012

(54) **INTERFACE CIRCUIT FOR UTILIZING A FACSIMILE COUPLED TO A PC AS A SCANNER OR PRINTER**

(75) Inventors: **Bruce Nachman**, deceased, late of Wayne, PA (US); **Marvin Nachman**, legal representative, Villanova, PA (US)

(73) Assignee: **Infinity Computer Products, Inc.**, Villanova, PA (US)

Reexamination Request:
No. 90/009,901, Apr. 19, 2011

Reexamination Certificate for:

Patent No.:	**6,894,811**
Issued:	**May 17, 2005**
Appl. No.:	**08/669,056**
Filed:	**Jun. 24, 1996**

Certificate of Correction issued Jun. 10, 2008.

Related U.S. Application Data

(63) Continuation-in-part of application No. 08/226,278, filed on Apr. 11, 1994, now Pat. No. 5,530,558.

(51) **Int. Cl.**
H04N 1/32 (2006.01)
H04N 1/04 (2006.01)

(52) **U.S. Cl.** **358/442**; 358/468; 358/474; 379/100.01

(58) **Field of Classification Search** ..... None
See application file for complete search history.

(56) **References Cited**

To view the complete listing of prior art documents cited during the proceeding for Reexamination Control Number 90/009,901, please refer to the USPTO's public Patent Application Information Retrieval (PAIR) system under the Display References tab.

Primary Examiner—Colin LaRose

(57) **ABSTRACT**

Apparatus for interfacing a conventional facsimile machine with a PC enabling the use of the facsimile machine as a scanner or printer. A first switch assembly selectively couples the PC modem and facsimile machine either to independent telephone lines in a normal mode or to one another in a scan/print mode. A manually operated switch assembly is depressed for a brief interval sufficient to activate a ringing circuit which converts DC power from a small battery source to a 20 Hz sine wave of 90 volt amplitude and applies the sine wave signal to the PC to cause the PC or facsimile to enter into a scan or print mode, respectively. The manually operable switch is then released to apply a constant current to the facsimile machine to simulate an off-hook condition. A facsimile machine start button is then operated to start the facsimile machine which scans documents provided therein and transmits the scanned data in a conventional facsimile transmission format or activate the PC to transmit a fax in conventional facsimile transmission format to utilize the facsimile machine as a printer. The PC may be equipped with a suitable software program for converting non-graphic, i.e. such as word-type information into a binary format suitable for use in word processing applications and may store the data in a memory for subsequent use. An automatic circuit may be provided to initiate a scanning or printing mode responsive to receipt of a unique number received from either the facsimile machine or the PC, thus eliminating the need for switches.

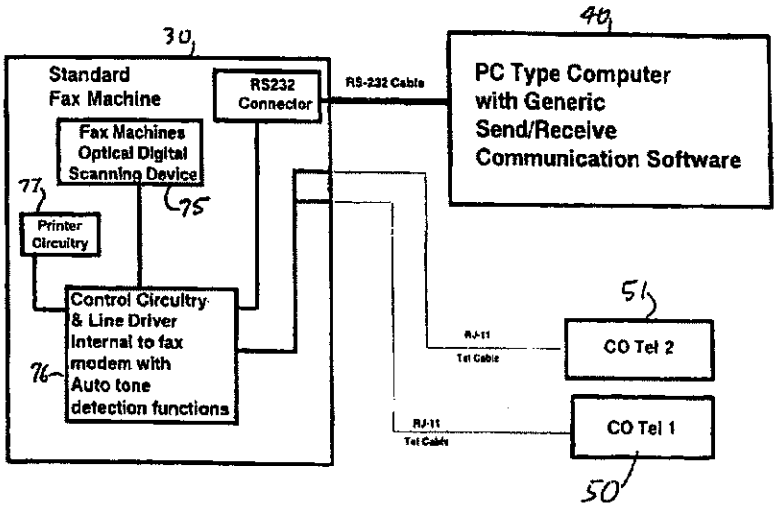

EX PARTE REEXAMINATION CERTIFICATE ISSUED UNDER 35 U.S.C. 307

THE PATENT IS HEREBY AMENDED AS INDICATED BELOW.

Matter enclosed in heavy brackets [ ] appeared in the patent, but has been deleted and is no longer a part of the patent; matter printed in italics indicates additions made to the patent.

AS A RESULT OF REEXAMINATION, IT HAS BEEN DETERMINED THAT:

Claims **1**, **6**, **7**, **12** and **18-20** are determined to be patentable as amended.

Claims **2-5**, **8-11** and **13-17** dependent on an amended claim, are determined to be patentable.

1. A method of creating a scanning capability from a facsimile machine to a computer, with scanned image digital data signals transmitted through a bi-directional direct connection via a passive link between the facsimile machine and the computer, comprising the steps of:

by-passing or isolating the facsimile machine and the computer from the public network telephone line;

coupling the facsimile machine to the computer;

conditioning the computer to receive digital facsimile signals representing data on a scanned document; and

conditioning the facsimile machine to transmit digital signals representing data on a scanned document to the computer, said computer being equipped with *unmodified standard protocol* send/receive driver communications software enabling the reception of scanned image signals from the facsimile machine, said transmitted digital facsimile signals being received directly into the computer through the bi-directional direct connection via the passive link, thereafter, said computer processing the received digital facsimile signals of the scanned document as needed.

6. A method of creating a scanning capability from a facsimile machine to a computer equipped with a modem, with scanned image data signals transferred through a bi-directional direct connection via a passive link between the facsimile machine and the computer, comprising the steps of:

by-passing or isolating the facsimile machine and the computer from the public network telephone line;

coupling the facsimile to the computer;

conditioning the computer to receive facsimile signals representing data on a scanned document; and

conditioning the facsimile machine to transmit signals representing data on a scanned document to the computer, said computer being equipped with *unmodified standard protocol* send/receive driver communications software enabling the reception of scanned image signals from the facsimile machine, said transmitted facsimile signals being received through the bi-directional direct connection via the passive link to the computer modem, thereafter, said computer processing the received facsimile signals of the scanned document as needed.

7. A method of making a facsimile machine operable as a scanner and printer for a personal computer, by transferring digital data through a bi-directional direct connection via a passive link between the facsimile machine and the computer, each of the facsimile machine and personal computer for communicating normally using at least one public network telephone line, comprising the steps of:

configuring the facsimile machine to communicate with the personal computer using a digital connector port of the facsimile machine and personal computer, with both the facsimile machine and personal computer isolated from said at least one public network telephone line;

arranging the facsimile machine to be in a digital connection mode; and

using an unmodified standard protocol for shifting the personal computer to a connected mode for sending or receiving digital signals through the bi-directional direct connection via the passive link for scanning and printing between the computer and the facsimile machine, in a facsimile format, using the digital connector port of the personal computer, said computer being equipped with send/receive driver communications software enabling the transfer of the scanning and printing signals between the computer and the facsimile machine.

12. A method of using a facsimile machine as a scanner and printer by transferring data signals through a bi-directional direct connection via a passive link between the facsimile machine and the personal computer, each of the facsimile machine and personal computer for communicating using telephone types of circuits, said facsimile machine and computer being isolated from the public telephone network, comprising the steps of:

(a) configuring the facsimile machine to communicate with the personal computer using the facsimile machine, and by-passing or isolating the facsimile machine and computer from the public telephone network;

(b) arranging the facsimile machine to be in a simulated off-hook condition, or connection mode; and

(c) *using an unmodified standard protocol for* shifting the personal computer to an off-hook condition, or connection mode for sending or receiving signals in facsimile formats through the bi-directional direct connection via the passive link between the personal computer and the facsimile machine;

said computer being equipped with send/receive driver communications software enabling the transfer of the scanning and printing signals between the computer and the facsimile machine.

18. A method of using a facsimile machine with a computer, one or both of which being connected to a telephone line such that said facsimile machine operates as a scanning and printing device for the computer when isolated from the telephone line comprising the steps of:

(a) coupling the facsimile machine to the computer through a bi-directional direct connection via a passive link;

(b) generating a signal to simulate an off-hook condition or connection mode providing a direct path whereby the facsimile machine is conditioned to transmit or receive signals through the bi-directional direct connection via the passive link to the computer;

(c) generating a facsimile machine signal whereby the computer is conditioned to receive signals representing data on a scanned document; and

(d) generating a computer signal whereby the facsimile machine is conditioned to receive signals representing data on a document to be printed;

said computer being equipped with *unmodified standard protocol* send/receive driver communications software enabling the reception of scanned image signals from the facsimile machine or the sending of computer data to the facsimile machine for printing.

19. A method of using a facsimile machine with a computer, one or both of which being connected to a telephone line such that said facsimile machine operates as a printing device for the computer when isolated from the telephone line, comprising the steps of:

(a) coupling the facsimile machine to the computer through a bi-directional direct connection via a passive link, which enables transfer of digital image signals in both directions;

(b) generating a signal representative of a facsimile machine communications signals, whereby the computer is conditioned to transmit signals representing data on a document to be printed; and

(c) generating a signal to simulate an off-hook condition or connection mode providing a direct path whereby the facsimile machine is conditioned to receive signals through the bi-directional direct connection via the passive link representing data from the computer of a document to be printed, *wherein the computer is equipped with unmodified standard protocol send/receive driver communication software.*

20. A method of making a facsimile machine operable as a scanner and printer for a computer, each of the facsimile machine and computer for communicating normally using at least one public network telephone line, comprising the steps of:

(a) configuring the facsimile machine to communicate with the personal computer through a bi-directional direct connection via a passive link between a digital connector port on the facsimile machine and a digital connector port on the computer, with both the facsimile machine and computer by-passing or isolated from said at least one public network telephone line;

(b) arranging the facsimile machine to send or receive digital data signals; and

(c) coupling the digital data signals through the bi-directional direct connection via the passive link between the personal computer and the facsimile machine;

said computer being equipped with *unmodified standard protocol* send/receive driver communications software enabling the reception of scanned image signals from the facsimile machine or the sending of computer data to the facsimile machine for printing.

* * * * *

EXHIBIT B

US007489423B2

(12) **United States Patent**
Nachman

(10) **Patent No.: US 7,489,423 B2**
(45) **Date of Patent: Feb. 10, 2009**

(54) **INTERFACE CIRCUIT FOR UTILIZING A FACSIMILE MACHINE COUPLED TO A PC AS A SCANNER OR PRINTER**

(76) Inventor: **Bruce Gregory Nachman**, Wayne, PA (US); **Marvin Jules Nachman**, legal representative, 315 Saybrook Rd., Villanova, PA (US) 19085

(*) Notice: Subject to any disclaimer, the term of this patent is extended or adjusted under 35 U.S.C. 154(b) by 642 days.

(21) Appl. No.: **11/084,297**

(22) Filed: **Mar. 19, 2005**

(65) **Prior Publication Data**

US 2005/0243380 A1 Nov. 3, 2005

Related U.S. Application Data

(60) Division of application No. 08/669,056, filed on Jun. 24, 1996, now Pat. No. 6,894,811, which is a continuation-in-part of application No. 08/226,278, filed on Apr. 11, 1994, now Pat. No. 5,530,558.

(51) **Int. Cl.**
H04N 1/32 (2006.01)
H04N 1/04 (2006.01)

(52) **U.S. Cl.** **358/442**; 358/468; 358/474; 358/296; 379/100.01

(58) **Field of Classification Search** 358/442, 358/468, 443, 400, 401, 474, 434–437, 1.13, 358/1.15, 440, 1.6, 296; 379/100.15, 100.01, 379/100.02, 100.06, 100.05, 100.13, 93.1
See application file for complete search history.

(56) **References Cited**

U.S. PATENT DOCUMENTS

3,558,811 A 1/1971 Montevecchio

(Continued)

FOREIGN PATENT DOCUMENTS

CN 1069155 A 2/1993

(Continued)

OTHER PUBLICATIONS

English Language Abstract of JP63187960; Aug. 3, 1988.

(Continued)

Primary Examiner—Cheukfan Lee

(57) **ABSTRACT**

Apparatus for interfacing a conventional facsimile machine with a PC enabling the use of the facsimile machine as a scanner or printer. A first switch assembly selectively couples the PC modem and facsimile machine either to independent telephone lines in a normal mode or to one another in a scan/print mode. A manually operated switch assembly is depressed for a brief interval sufficient to activate a ringing circuit which converts DC power from a small battery source to a 20 Hz sine wave of 90 volt amplitude and applies the sine wave signal to the PC to cause the PC or facsimile to enter into a scan or print mode, respectively. The manually operable switch is then released to apply a constant current to the facsimile machine to simulate an off-hook condition. A facsimile machine start button is then operated to start the facsimile machine which scans documents provided therein and transmits the scanned data in a conventional facsimile transmission format or activate the PC to transmit a fax in conventional facsimile transmission format to utilize the facsimile machine as a printer. The PC may be equipped with a suitable software program for converting non-graphic, i.e. such as word-type information into a binary format suitable for use in word processing applications and may store the data in a memory for subsequent use. An automatic circuit may be provided to initiate a scanning or printing mode responsive to receipt of a unique number received from either the facsimile machine or the PC, thus eliminating the need for switches.

6 Claims, 12 Drawing Sheets

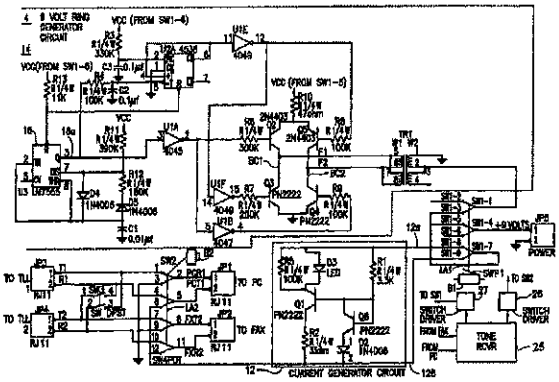

U.S. PATENT DOCUMENTS

4,607,289	A		8/1986	Kurokawa
4,802,204	A		1/1989	Chang
4,816,911	A		3/1989	Kirsch et al.
4,868,672	A		9/1989	Hiroki et al.
4,910,607	A		3/1990	Kita et al.
4,964,154	A		10/1990	Shimotono
4,989,163	A		1/1991	Kawamata et al.
4,991,200	A		2/1991	Lin
5,021,892	A		6/1991	Kita et al.
5,175,750	A		12/1992	Donovan et al.
5,216,517	A		6/1993	Kinoshita et al.
RE34,429	E		11/1993	Baran et al.
5,297,146	A		3/1994	Ogawa
5,390,031	A		2/1995	Kang et al.
5,425,135	A		6/1995	Motoyama et al.
5,452,106	A		9/1995	Perkins
5,459,579	A		10/1995	Hu et al.
5,528,385	A		6/1996	Manning
5,530,554	A		6/1996	Maehara
5,532,844	A		7/1996	Kagami et al.
5,552,901	A		9/1996	Kikuchi et al.
5,588,047	A		12/1996	Rosengren et al.
5,590,339	A		12/1996	Chang
H1677	H		9/1997	Hu et al.
5,680,227	A		10/1997	Picard
5,684,607	A	*	11/1997	Matsumoto 358/442
5,847,843	A		12/1998	Shibata et al.
5,872,901	A		2/1999	Konno et al.
5,914,789	A		6/1999	Murata
6,064,491	A		5/2000	Matsumoto
6,307,639	B1		10/2001	Eom et al.
6,519,057	B1		2/2003	Kurosawa et al.
7,099,050	B2		8/2006	Motoyama
7,262,871	B2		8/2007	Matsueda et al.
2003/0200403	A1		10/2003	Niwa et al.

FOREIGN PATENT DOCUMENTS

DE	4239349 A1	9/1994
DE	4312136 A1	10/1994
EP	0655852 B1	5/1995
JP	63-187960	3/1988
JP	64-22166	1/1989
JP	1-168161	7/1989
JP	2-151459	6/1990
JP	3-38163	2/1991
JP	4-33061	2/1992
JP	5-14580	1/1993
JP	5-189104	7/1993
JP	6-54106	2/1994
JP	6-54107	2/1994
JP	6-70083	3/1994
WO	WO 95/19089	7/1995

OTHER PUBLICATIONS

Abstract of "Turning Microcomputers into Fax Machines"; Lu, Cary; High Technology; vol. 7. Iss. 3; pp. 60-61; Mar. 1987.
"Okidata deploys i960 in multi-use peripheral—Doc-It peripheral device—Product Announcement"; Electronic News; Sep. 28, 1992.
"Company News; New Product from Okidata"; The New York Times; Sep. 29, 1992.
Abstract of "Rockwell International's low cost RFX96V12 MONOFAX fax modem chip"; Newsbytes News Network, Mar. 15, 1994.
"Information Delivery and Fax Technology"; Hawkins; Online, pp. 98-101; Jul. 1990.
"Personal Computer Image Communications Using Facsimile"; IEEE Journal on Selected Areas in Communications, vol. 7, No. 2, pp. 276-282; Feb. 1989.
Abstract of "Pursuing One Peripheral"; Blankenhorn, Dana; Barrington, vol. 34, Iss. 20, pp. 71-73; Oct. 15, 1988.
English Language Abstract of CN1069155; Feb. 17, 1993.
English Language Abstract of JP5014580; Jan. 22, 1993.
English Language Abstract of JP6070083; Mar. 11, 1994.
English Language Abstract of JP3038163; Feb. 19, 1991.
English Language Abstract of JP4033061; Feb. 4, 1992.
English Language Abstract of JP1168161; Jul. 3, 1989.
English Language Abstract of JP2151459; Jun. 11, 1990.
English Language Abstract of JP5189104; Jul. 30, 1993.
English Language Abstract of DE4312136; Oct. 20, 1994.
English Language Abstract of DE4239349; Sep. 22, 1994.

* cited by examiner

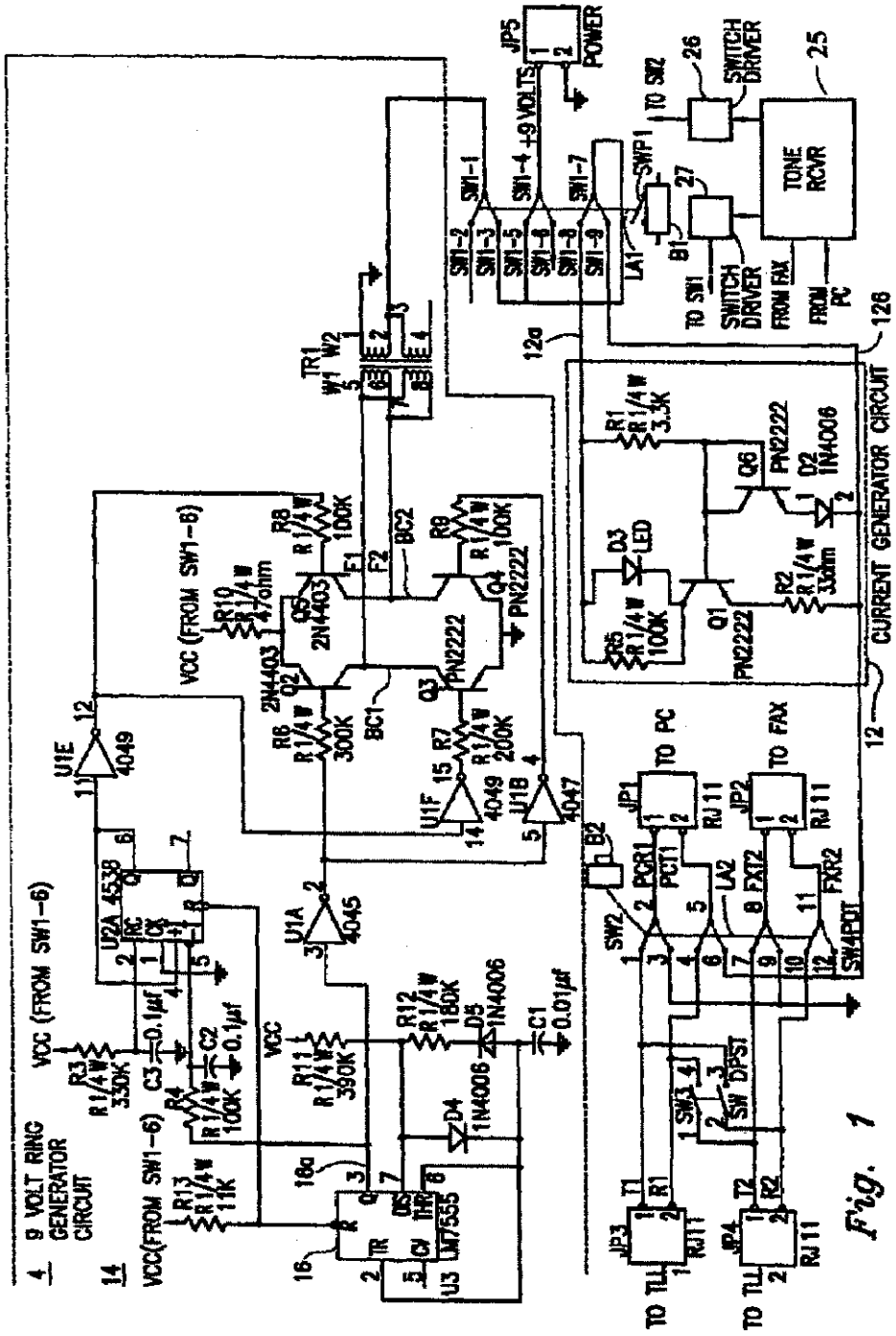
4 9 VOLT RING GENERATOR CIRCUIT
14
VCC(FROM SW1-6)
VCC (FROM SW1-6)
VCC
U1E 4049
U2A 4538
U1A 4045
U1F 4049
U1B 4047
U3 LM555
TR1
Q1 PN2222
Q2 2N4403
Q3 PN2222
Q4 PN2222
Q5 2N4403
Q6 PN2222
D2 1N4006
D3 LED
D4 1N4006
D5 1N4006
JP5 POWER
+9 VOLTS
SW1-1
SW1-2
SW1-3
SW1-4
SW1-5
SW1-6
SW1-7
SW1-8
SW1-9
SWP1
LA1
B1
TO SW2
TO SW1
SWITCH DRIVER
FROM FAX
FROM PC
TONE RCVR
CURRENT GENERATOR CIRCUIT
TO PC
TO FAX
TO TLL
JP1
JP2
JP3
JP4
RJ11
SW4PDT
SW3 DPST
SW2
B2
PCR1
PCT1
FXT2
FXR2
LA2
T1
R1
T2
R2
BC1
BC2
F1
F2
E1
E2
E3
E4
W1
W2
12
12a
12b
16
16a
25
26
27

Fig. 1

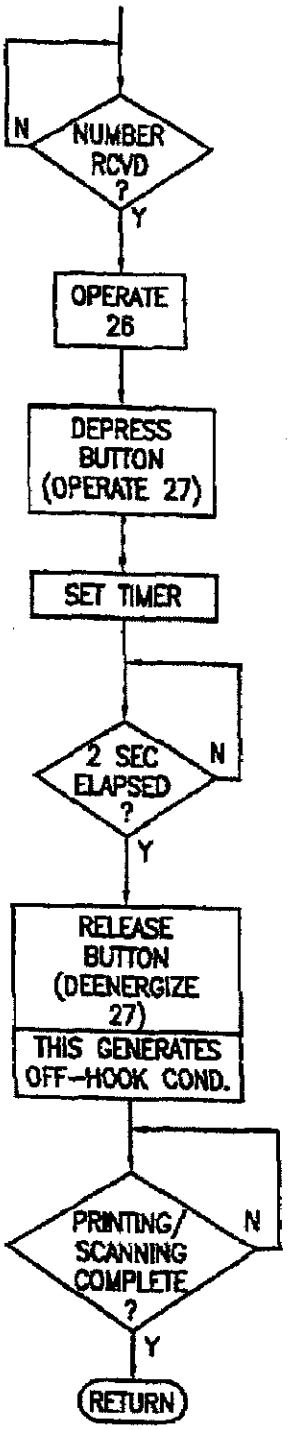
NUMBER RCVD ?
N
Y
OPERATE 26
DEPRESS BUTTON (OPERATE 27)
SET TIMER
2 SEC ELAPSED ?
N
Y
RELEASE BUTTON (DEENERGIZE 27)
THIS GENERATES OFF-HOOK COND.
PRINTING/ SCANNING COMPLETE ?
N
Y
RETURN

Fig. 1a

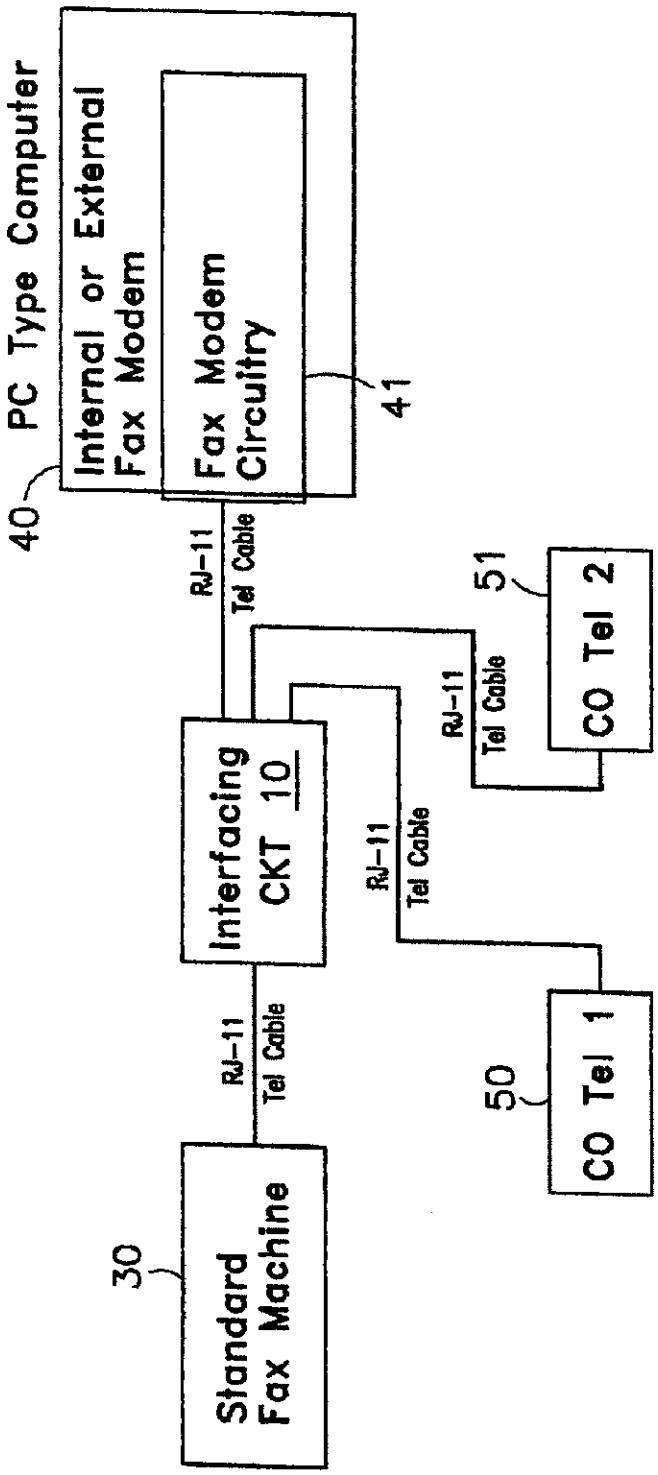
PC Type Computer
Internal or External Fax Modem
Fax Modem Circuitry
40
41
RJ-11
Tel Cable
Interfacing CKT 10
RJ-11
Tel Cable
Standard Fax Machine
30
RJ-11
Tel Cable
CO Tel 1
50
RJ-11
Tel Cable
CO Tel 2
51

Fig. 2a

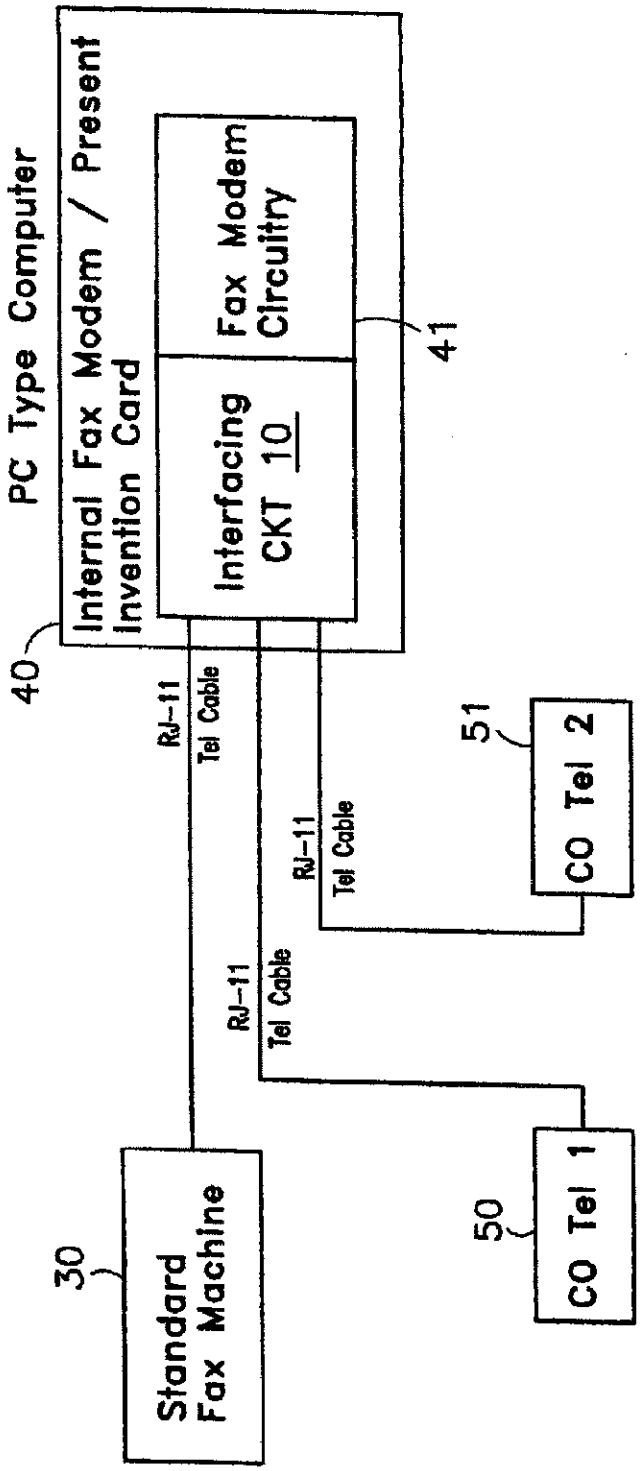
PC Type Computer
Internal Fax Modem / Present Invention Card
Interfacing CKT 10
Fax Modem Circuitry
41
40
RJ-11
Tel Cable
RJ-11
Tel Cable
RJ-11
Tel Cable
51
CO Tel 2
50
CO Tel 1
30
Standard Fax Machine

Fig. 2b

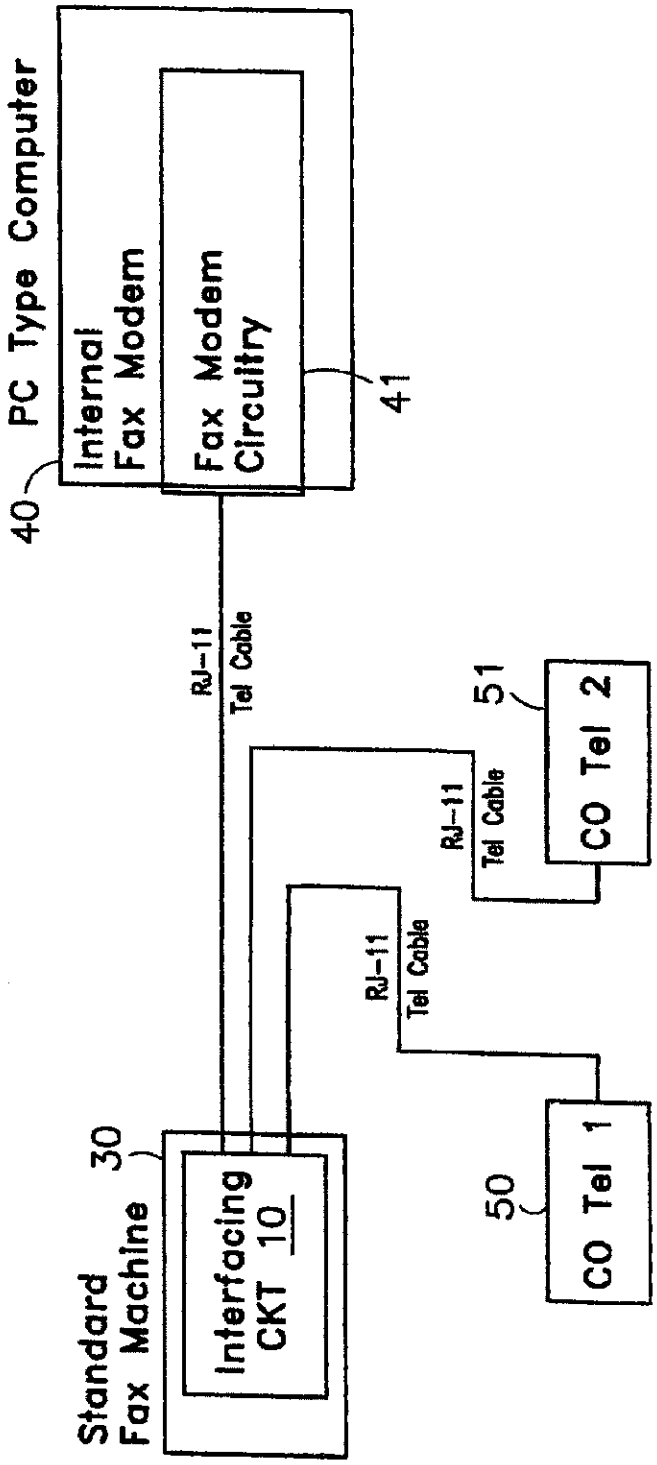
PC Type Computer
Internal Fax Modem
Fax Modem Circuitry
40
41
RJ-11 Tel Cable
RJ-11 Tel Cable
RJ-11 Tel Cable
51
CO Tel 2
50
CO Tel 1
Standard Fax Machine
30
Interfacing CKT 10

Fig. 2c

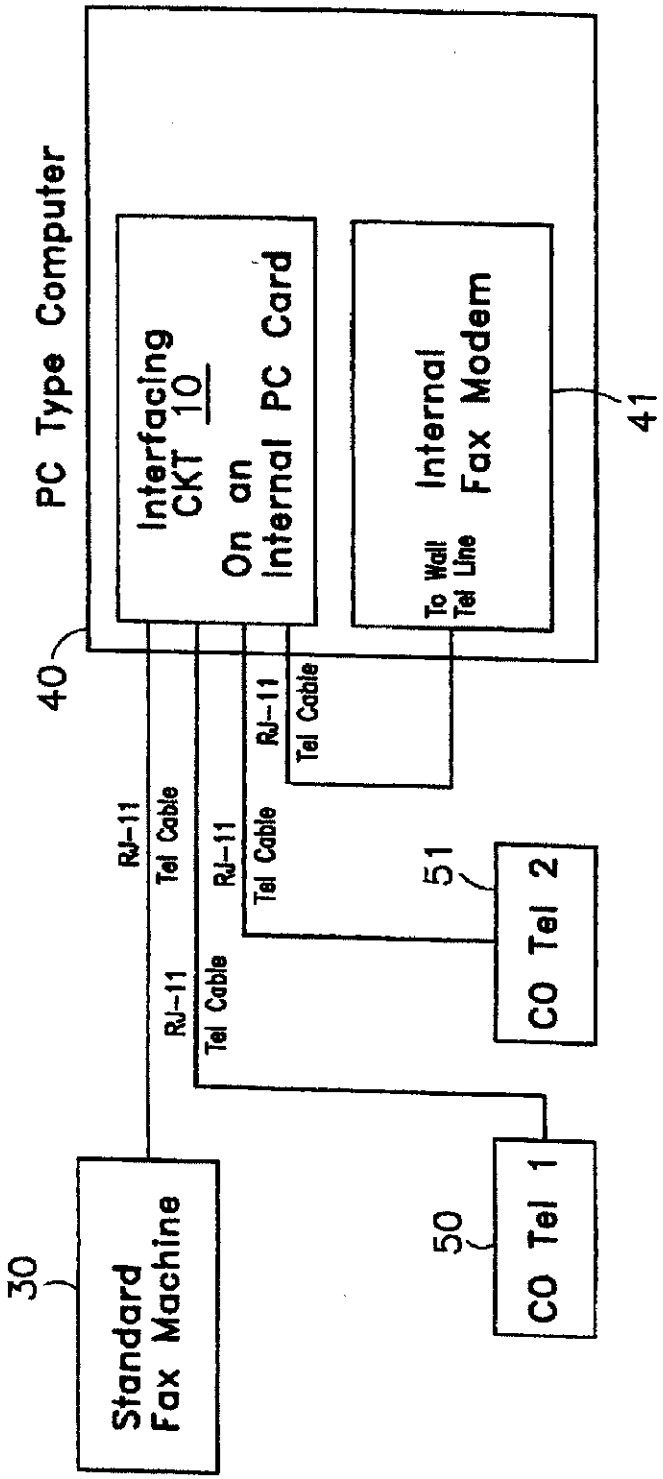
PC Type Computer
Interfacing CKT 10 On an Internal PC Card
Internal Fax Modem
To Wall Tel Line
40
41
RJ-11
Tel Cable
RJ-11
Tel Cable
RJ-11
Tel Cable
RJ-11
Tel Cable
51
CO Tel 2
50
CO Tel 1
30
Standard Fax Machine

Fig. 2d

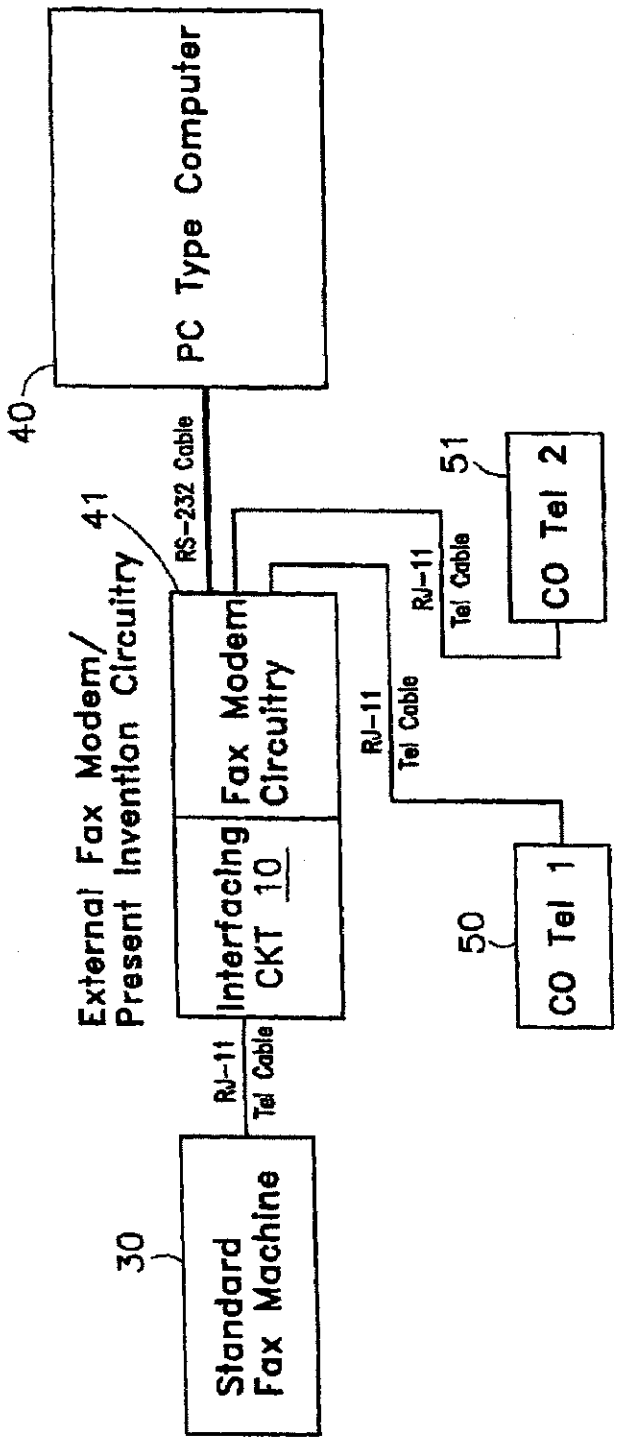
PC Type Computer
40
RS-232 Cable
41
External Fax Modem/
Present Invention Circuitry
Fax Modem
Circuitry
Interfacing
CKT 10
RJ-11
Tel Cable
RJ-11
Tel Cable
RJ-11
Tel Cable
51
CO Tel 2
50
CO Tel 1
30
Standard
Fax Machine

Fig. 2e

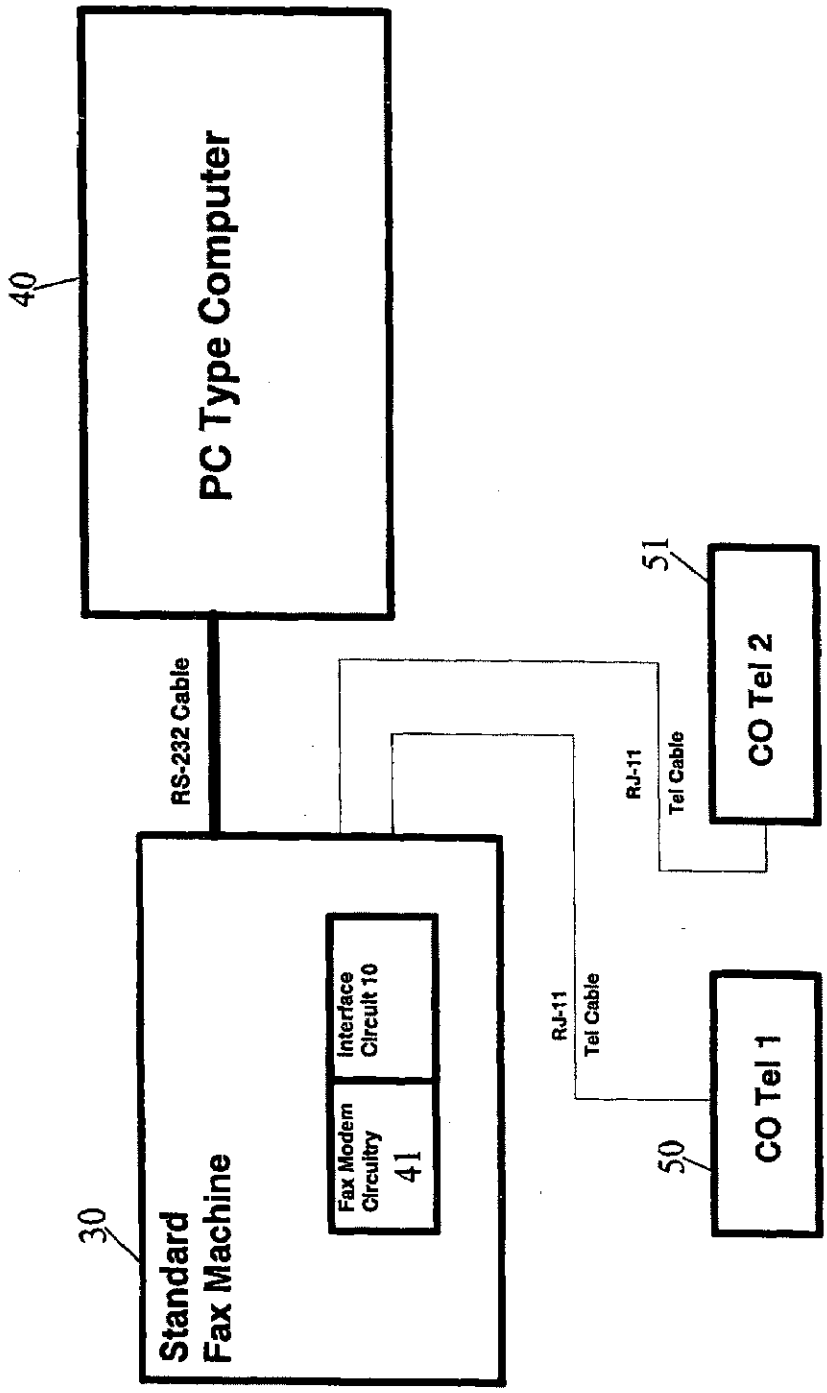
40
PC Type Computer
RS-232 Cable
30
Standard
Fax Machine
Fax Modem
Circuitry
41
Interface
Circuit 10
RJ-11
Tel Cable
RJ-11
Tel Cable
50
CO Tel 1
51
CO Tel 2

Fig. 2f

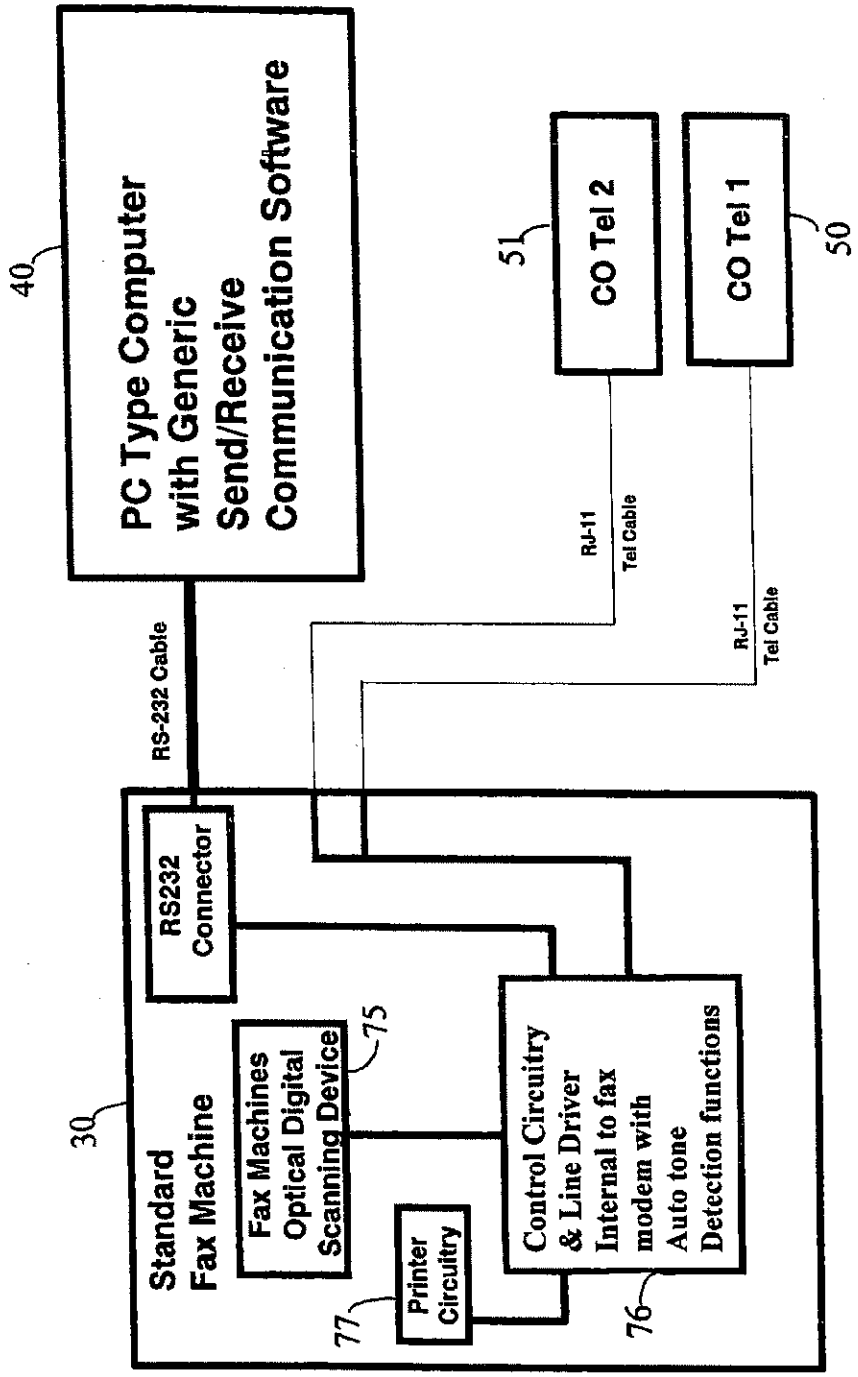
40
PC Type Computer
with Generic
Send/Receive
Communication Software
RS-232 Cable
30
Standard
Fax Machine
RS232
Connector
Fax Machines
Optical Digital
Scanning Device
75
Printer
Circuitry
77
Control Circuitry
& Line Driver
Internal to fax
modem with
Auto tone
Detection functions
76
RJ-11
Tel Cable
RJ-11
Tel Cable
51
CO Tel 2
CO Tel 1
50

Fig. 2g

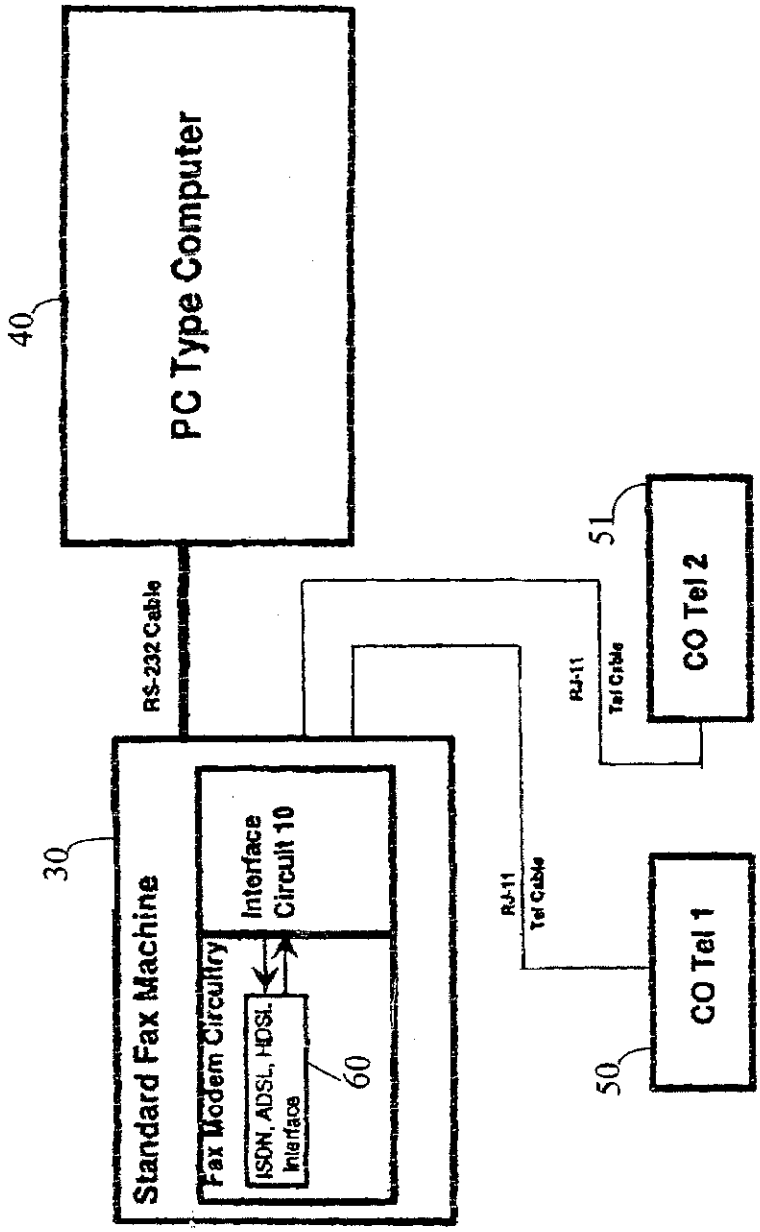
PC Type Computer
40
RS-232 Cable
Standard Fax Machine
30
Fax Modem Circuitry
Interface Circuit 10
ISDN, ADSL, HDSL Interface
60
RJ-11 Tel Cable
RJ-11 Tel Cable
CO Tel 1
50
CO Tel 2
51

Fig. 2h

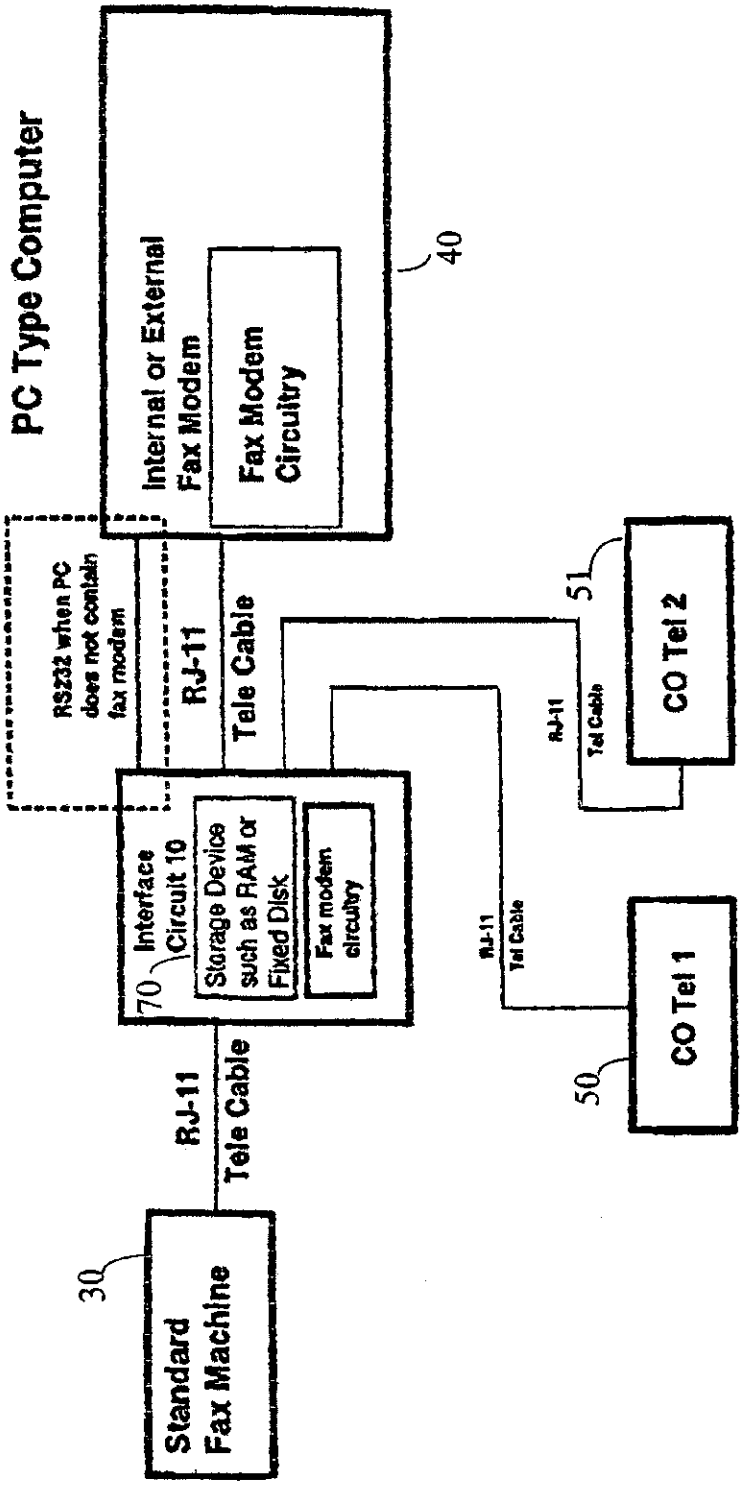
PC Type Computer
Internal or External Fax Modem
Fax Modem Circuitry
40
RS232 when PC does not contain fax modem
RJ-11
Tele Cable
Interface Circuit 10
70
Storage Device such as RAM or Fixed Disk
Fax modem circuitry
RJ-11
Tel Cable
CO Tel 2
51
RJ-11
Tel Cable
CO Tel 1
50
RJ-11
Tele Cable
Standard Fax Machine
30

Fig. 2i

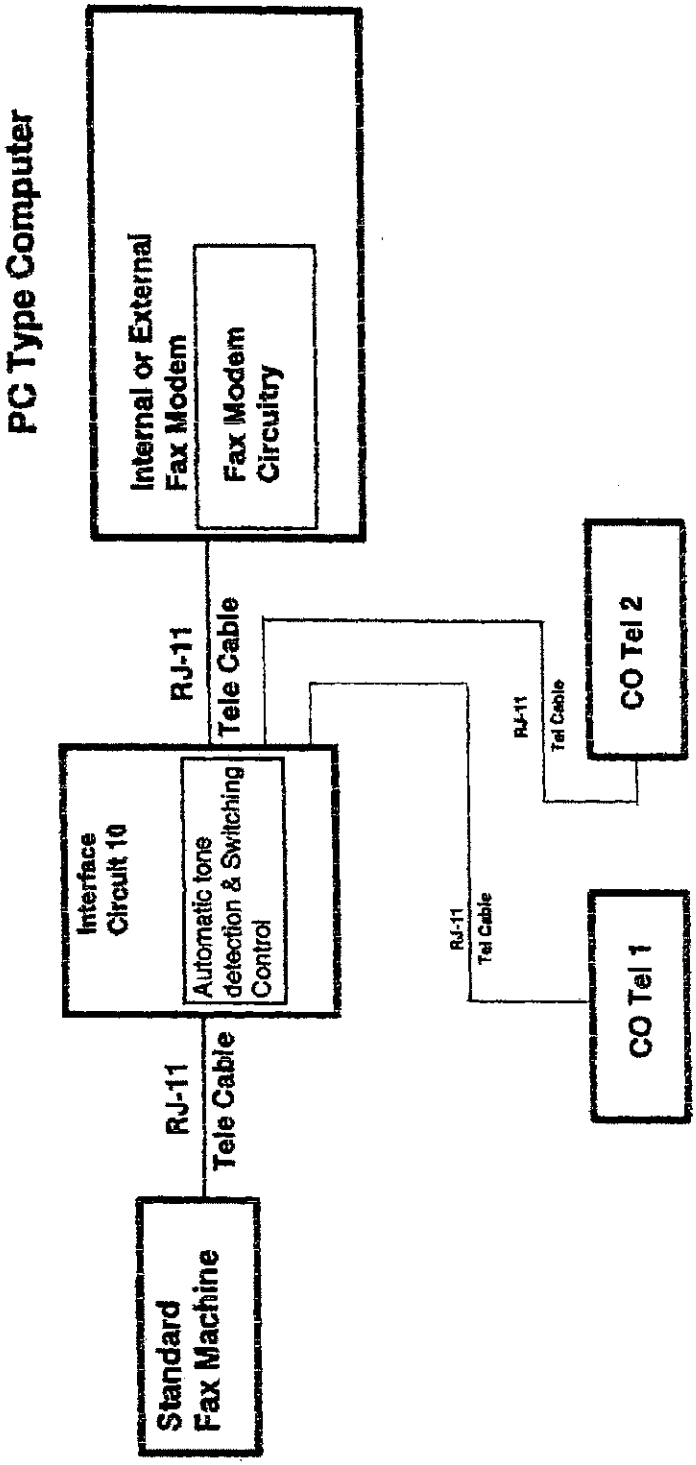
PC Type Computer
Internal or External Fax Modem
Fax Modem Circuitry
RJ-11
Tele Cable
Interface Circuit 10
Automatic tone detection & Switching Control
RJ-11
Tel Cable
CO Tel 2
RJ-11
Tel Cable
CO Tel 1
RJ-11
Tele Cable
Standard Fax Machine

Fig. 2j

INTERFACE CIRCUIT FOR UTILIZING A FACSIMILE MACHINE COUPLED TO A PC AS A SCANNER OR PRINTER

This application is a divisional of the continuation-in-part application Ser. No. 08/669,056, filed Jun. 24, 1996 now U.S. Pat. No. 6,894,811, which is a continuation-in-part of application Ser. No. 08/226,278, filed Apr. 11, 1994, which issued as U.S. Pat. No. 5,530,558. These applications are incorporated herein by reference.

The following represents a true and accurate copy of continuation-in-part application Ser. No. 08/669,056, except for the addition of the new claims.

The claims herein incorporate matter subject to a restriction requirement in the CIP application Ser. No. 08/669,056.

FIELD OF THE INVENTION

The present invention relates to interfacing a facsimile with a PC and more particularly to an interface circuit of highly simplified design and including a novel ringing circuit capable of generating a sign wave of a given amplitude and frequency from a small, portable DC battery or 9V DC power supply.

BACKGROUND OF THE INVENTION

As is well known in the art, a conventional facsimile scans documents and transmits the scanned information through a modem in a standard facsimile format to a remote facsimile which receives the transmitted data by a modem and converts the transmitted data into a form for printing a document which is a replica of the document scanned by the transmitting facsimile.

Scanning and printing devices especially adapted for use with PCs (i.e. personal computers) are relatively expensive devices typically costing many hundreds of dollars to as much as several thousands of dollars for applications requiring character recognition capabilities.

It has been recognized that conventional facsimile machines may be utilized as scanners: or printers for PCs. However, the interface devices presently available are both complicated and expensive and typically require a microprocessor which further tends to increase both cost and circuit complexity.

OBJECT OF THE INVENTION

It is, therefore, a principal object of the present invention to provide a circuit for interfacing a PC and a facsimile to enable the facsimile to be utilized as a scanner or a printer for a PC and to accomplish all of the objectives of a scanner or a printer in a simple straightforward manner through the use of a circuit of highly simplified design and low cost.

BRIEF DESCRIPTION OF THE INVENTION

The present invention achieves all of the above as well as other objectives through apparatus which is characterized by comprising first switch means capable of selectively coupling a PC modem and a facsimile modem to independent telephone lines when in a non-scanning/printing mode and for decoupling the PC and facsimile modems from the telephone lines and coupling these modems to one another when placed in a scanning/printing mode.

Second manually operable switch means activates a novel ringing circuit which generates a sine wave of appropriate

amplitude and frequency and applies this ringing circuit to the PC modem, when used as a scanner or to the facsimile when being used as a printer, causing the PC or facsimile machine to respond to the simulated transmit request.

Release of the circuitry operating button causes the interface circuitry to apply an off-hook condition to the facsimile. Document scanning or printing is initiated by pressing the facsimile start button or the start button provided as part of the PC or by a program step integrated into the PC as part of a print mode (selecting the facsimile as the output device for printing). Transmitted data may be directly stored in a PC memory. Documents incorporating alphanumeric data may be converted by a software program incorporated into the PC.

The ring generating circuit responsive to pressing of the operating button generates a transmit request signal by converting the low voltage from a DC source into a 20 cycle sine wave of 90 volt amplitude through the employment of a pulse generating circuit coupled to phase delay means and applying phase delayed and undelayed pulses to a transistorized switching circuit for selectively applying positive DC voltage to opposing inputs of a step-up transformer which applies a boosted sinusoidal ring signal to the PC modem, the ring generating circuit generating a ringing signal of the appropriate amplitude and frequency in a highly simplified and inexpensive manner. Since operation of the ringing circuit is completed in less than two seconds, a battery, if used, will have an extremely long operating life. Alternatively, if a 9V DC power source is used the battery is not required at all.

The simple, straightforward operation of only three switches eliminates the need for complicated, expensive and typically microprocessor-based circuitry.

BRIEF DESCRIPTION OF THE FIGURES

The above, as well as other objects of the present invention, will become apparent upon reading the accompanying description and drawings in which:

FIG. **1** is a circuit diagram of the interface circuitry of the present invention which enables a PC to utilize a conventional facsimile as a sophisticated scanner or printer.

FIG. **1***a* is a flow diagram of the circuitry of FIG. **1** employing the microprocessor-based tone detecting circuit of FIG. **1**.

FIGS. **2***a*- **2***j* show simplified block diagrams of various system arrangements employing the circuitry of the present invention.

DETAILED DESCRIPTION OF THE INVENTION AND PREFERRED EMBODIMENTS THEREOF

FIG. **1** shows an interface circuit **10** embodying the principles of the present invention and being comprised of a switch assembly SW**2** which is a four-pole double-throw switch having four movable switch arms SW**2-2**, SW**2-5**, SW**2-8**, and SW**2-11**, each cooperating with a pair of stationary contacts, as shown. For example, and for simplicity, note that switch arms SW**2-2** is switchable between stationary contacts SW**2-1** and SW**2-3**.

Movable switch arms SW**2-2**, SW**2-5**, SW**2-8** and SW**2-11** are all ganged to operate in unison as shown by common operating button B**2** coupled to the switch arms through a linkage arm LA**2** shown in schematic fashion as a dotted line. The switch is designed so that the switch arms are retained in the positions to which they are moved.

The switch arms are arranged in pairs, switch arms SW**2-2** and SW**2-5** selectively coupling a modem of a PC (not shown for purposes of simplicity) to either a first telephone line #1

through jumper JP3 or directly to a local facsimile machine (not shown for purposes of simplicity) through a jumper terminal JP2.

In a similar fashion, a pair of switch arms SW2-8 and SW2-11 selectively couple the local facsimile machine through jumper JP2 to either a separate telephone line #2 (through jumper JP4) or to the modem of the PC.

A double-pole single-throw switch SW3 is provided to couple either the local facsimile machine or the PC modem to a single telephone line or alternatively, disconnects the PC modem and facsimile machine from the common telephone line. For example, in applications where both the local facsimile and the PC each have an independent, dedicated telephone line, switch SW3 remains open. In applications where only a single telephone line is provided, both PC and the local facsimile may share the single telephone line by gaining access thereto in a staggered manner.

Switch SW1 which is a three-pole, double-throw switch, comprises three movable switch arms SW1-1, SW1-4 and SW1-7, each movable switch arm cooperating with a pair of stationary switch arms.

Movable switch arm SW1-1 selectively couples the output terminal of the pair of secondary windings W2 of a step-up transformer TR1 either to stationary terminal SW1-2, which isolates the output of the transformer TR1 from the operating circuitry, or stationary contact SW1-3 which couples the secondary winding W2 of transformer TR1 through movable switch arm SW1-7 and stationary contact SW1-9 simultaneously to stationary contacts SW2-6 and SW2-12 of four-pole double-throw switch SW2 for simultaneous connection to the PC modem and the local facsimile, when switch arms SW2-5 and SW2-11 respectively engage stationary contacts SW2-6 and SW2-12.

Movable switch arm SW1-4 selectively couples a small nine volt (9V) DC source (through jumper J5) to either stationary switch arm SW1-5 for coupling nine volt (9V) DC to a current generator circuit 12 or alternatively coupling nine volt (9V) DC to stationary terminal SW1-6 which in turn provides DC power to the nine volt (9V) ring generator circuit arranged within the dotted region as shown.

Current generator circuit 12 is comprised of resistors R1, R2 and R5, transistors Q1 and Q6, diode D2 and LED-type diode D3 which are connected in the manner shown to provide a constant current which simulates an off-hook signal, utilized in the manner to be more fully described hereinbelow. Resistor R2 serves as a current limiting resistor. LED D3 lights to denote operation of the constant current generator.

Ring generator circuit 14, which is utilized to generate a 20 Hz sine wave of a 90 volt amplitude, comprises a 555-type timing circuit 16 which, when activated by a nine volt DC input, applied to timer 16 through terminal VCC and resistor R13, provides a pulse train of equal width, positive-going pulses at a pulse rate of approximately 20 Hz at its output 16*a*.

The pulse train generated by the 555 timer 16 is simultaneously applied to the input of inverter U1A whose output is simultaneously coupled to the base electrodes of transistors Q2 and Q4, through resistor R6 and through inverter U1B and resistor R9.

The pulse train, as was set forth hereinabove, is simultaneously coupled to the −T input of a one-shot multivibrator operating as a phase delay circuit and whose Q output is coupled to the input of inverter U1E. The Q output of one-shot multivibrator U2A provides a phase delayed pulse which is coupled through the output of inverter U1E simultaneously to the base of transistor Q5 through resistor R8 and to the base of transistor Q3 through inverter U1F and resistor R7. Transistors Q2-Q5 and resistors R6-R9, together with resistor R10, form a full bridge switching circuit which is powered by the nine volt (9V) DC source applied to the terminal VCC to provide drive current sufficient to drive transformer TR1, comprised of a pair of primary windings W1 and a pair of secondary windings W2, to generate a sine wave output. The pair of primary windings W1 and secondary windings W2 are coupled in parallel and the windings are arranged to provide a step-up transformer to magnify the input voltage preferably by ten to one (10:1), generating the desired output voltage which, in the present application, is a 20 Hz output of 90 volt amplitude with 15 mils of current from a nine volt (9V) DC, 150 mils current source. If desired, the frequency, amplitude and current of the circuit can be changed by selecting different component values for the passive elements. The component values chosen in the present invention have been selected to generate a signal which reproduces a standard bell ring signal employed in a conventional transmission between remote facsimile machines. The branch circuits BC1 and BC2 of the bridge circuit are alternately rendered conductive to alternately apply a positive voltage to opposing inputs of the input windings W1 for generating a sine wave from the positive-going pulses produced by timer circuit 16. The two input windings W1 are coupled in parallel as are the output windings W2.

The bell ring signal is selectively supplied through movable switch arm SW1-1 of the three-pole, double-throw switch SW1 described hereinabove.

The operation of the interface circuit of the present invention is as follows:

Assuming that the local facsimile is desired to be operated in combination with the PC and to function as a scanner, the switch SW2 is moved from the normal position, in which the movable switch arms are shown in solid line fashion, to the dotted line position simultaneously disconnecting the PC modem and the local facsimile from the telephone lines and directly connecting the PC receive line, PCR1 to ground and the PC transmit line PCT1 directly to stationary contact SW1-9. The local facsimile transmit line. FXT2 is directly connected to ground and the facsimile receive line FXR2 is connected in common with line PCT1 to stationary contact SW1-9 of switch SW1. Switch SW3 may be either in the open or the closed position when switch SW2 is moved to the scan mode.

Switch SW1 is operated by pressing button BI which is ganged to the movable switch arms SW1-1, SW1-4 and SW1-7 by a common linkage arm represented schematically by dotted line LA1. A biasing member or spring SWP1 normally biases the movable switch arms to the solid line position shown in Figure. By depressing switch button B1, the switch arms SW1-1, SW1-4 and SW1-7 are simultaneously moved to the dotted line positions shown in FIG. 1. Button B1 is maintained in the depressed-position for a period preferably between one and two seconds. In the dotted Line position, the nine volt (9V) DC source is coupled through switch arm SW1-4 and stationary terminal SW1-6 to the VCC terminals of ring generator circuit 14, producing a 20 Hz sine wave of 90 volt amplitude and a current of 15 mils at the secondary windings W2, which is applied to the PC line PCT1 through SW-1, SW1-3, SW1-7, SW1-9, 126, SW2-6 and SW2-5, simulating what the PC believes is a request by a "remote" facsimile to transmit data thereto. The PC, which may be any type of computer (including but not limited to an Apple Macintosh, IBM PC, PCAT or PCXT) is provided with either an internal or external group III facsimile interface board, and shifts to a receive mode for receiving what appears to the PC to be a facsimile transmission from a "remote" facsimile machine.

After holding the button B1 depressed for a time which need not exceed approximately two seconds, button B1 is released causing the nine volt (9V) DC source to be coupled to input **12***a* of current generator circuit **12**, which circuit applies the constant current to the facsimile receive line FXR2 to create what appears to the facsimile machine to be an off-hook condition. Simultaneously therewith, LED D3 lights indicating that the current generator circuit is presently in operation.

The local facsimile machine recognizes the constant current as representative of an off-hook condition preparing the local facsimile machine for transmission.

Thereafter, the conventional start button of the facsimile machine (not shown for purposes of simplicity) is pressed to start communication of the data scanned by the local facsimile machine from a document (or documents) placed within the facsimile machine document input (also not shown for purposes of simplicity).

The facsimile machine may be either a group I, group II, or group III machine, although optimum document resolution can be obtained through the use of a group III facsimile machine.

The conventional PC can store the transmitted data in its memory as a "picture" the resolution of the picture being 200 by 100 pixels for old facsimile machines, 200 by 200 pixels for standard facsimile machines and 400 by 400 pixels for new facsimile machines. Alternatively, a conventional OCR software package such as, for example, a CAERE OCR program available from Bitsoftware may be employed. Many alternative OCR software packages may be utilized to convert the "picture" transmitted by the facsimile machine to binary character form for word processing use or the like.

Operation of the facsimile machine in combination with the PC wherein the facsimile machine operates as a printer is as follows:

The ring generating circuit is not required to be operated in this mode and in applications where a facsimile machine is interfaced with a PC for use only as a printer, the ring generating circuit and the cooperating spring bias switch may be eliminated.

Switch SW2 shown in FIG. **1** is moved from the solid line to the dotted line position decoupling the PC and facsimile machine from the telephone lines and coupling the PC and facsimile machine together.

Switch SW1 is operated to power the current generator circuit **12** causing both the PC and the facsimile machine to see an off-hook condition.

The computer (PC) is operated either by providing a switch such as a push button switch (not shown for purposes of simplicity) to enter into a standard protocol with the facsimile machine and thereafter to transmit information in standard facsimile machine format. The facsimile machine senses that it is communicating with a remote facsimile machine and creates a document in accordance with the data received from the PC in "pixel" form. The PC may be provided with a standard program having a print mode in which the facsimile machine is identified in the printing routine as the specific output device being utilized during such a print mode. Upon completion of printing mode, switch SW2 may be returned to the solid line position decoupling the PC from the facsimile machine and recoupling the PC and facsimile modems to their associated telephone lines.

FIGS. **2***a*-**2***h* show various arrangements in which the present invention may be utilized.

Noting, for example, FIG. **2***a*, the circuitry **10** of the present invention is coupled between a standard facsimile machine **30**, a PC-type computer **40** having a facsimile modem circuitry **41** and central office telephone lines **50** and **51**. In the arrangement shown in FIG. **2***a*, the facsimile modem circuitry may be either internal or external to the PC-type computer **40**.

FIG. **2***b* shows another alternative embodiment in which the circuitry of the present invention is incorporated into the PC-type computer and may be arranged on its own printed wiring board or on a printed wiring board which is common to the circuitry **10** of the present invention and the facsimile modem circuitry **41**. The arrangement of FIG. **2***b* is otherwise the same as that shown in FIG. **2***a*. The circuit **10** shown in FIG. **2***b* is provided with three RJ-**11** telephone cable connections for respective connection with the facsimile machine **30** and telephone lines **50** and **51**. If only one additional telephone cable is provided, the standard facsimile machine **40** and the internal facsimile modem **41** may share that cable.

FIG. **2***c* shows another alternative arrangement in which the circuitry **10** of the present invention is integrated into the standard facsimile machine **30**. The operation of the arrangement of FIG. **2***c* is otherwise similar to those shown in FIGS. **2***a* and **2***b*.

FIG. **2***d* shows an arrangement in which the circuitry **10** of the present invention is mounted upon its own printed wiring board and is arranged within the PC-type computer **40** and is electrically connected to the internal facsimile modem **41** by an external RJ-**11** cable as shown. The operation is otherwise the same as the embodiments of FIGS. **2***a*-**2***c* described hereinabove.

The circuitry **10** of the present invention may alternatively be placed upon a printed circuit card of approximately a credit card size for insertion in a bus slot provided in present-day PCs enabling the circuit on the printed circuit card, inserted into a slot provided along the exterior of the PC, to be coupled to a PCMCIA bus which is an additional bus that may be addressed by the PC.

FIG. **2***e* shows still another arrangement in which the PC-type computer **40** is coupled to external facsimile modem circuitry **41**, for example, through an RS-**232** cable. The facsimile machine interfaces to the external facsimile modem **41** through circuitry **10** by way of an RJ-**11** telephone cable. When in the normal mode of operation, circuitry **10** interfaces central office telephone lines **50** and **51** through the RJ-**11** telephone cables, as shown. Cable **50** may be employed for standard facsimile machine telephone communications while telephone line **51** is used for the external facsimile modem circuitry. If only one central office telephone line is available, line **50** may be shared in the manner previously described.

FIG. **2***f* shows an arrangement in which interface circuit **10** is internal to the facsimile machine. PC-type computer **40** is coupled to the facsimile modem circuitry **41** and interface circuit **10** through an RS-**232** cable. When in the normal mode of operation, circuitry **10** interfaces the central office telephone lines **50** and **51** through RJ-**11** telephone cables, as shown. Cable **50** may be employed for standard facsimile machine telephone communications while telephone line **51** is used for the external facsimile modem circuitry. If only one central office telephone line is available, line **50**, for example, may be shared in the manner previously described. The arrangement of FIG. **2***f* is used with PC's which do not have a fax modem installed. When interface **10** is installed internal to the facsimile, the fax modem of the fax machine incorporates many of the functions of circuit **10**, through integration of the already existing circuitry components of the fax modem.

The present invention may be employed with telephone systems having digital signal processing. FIG. **2***h*, which is similar to FIG. **2***f*, and which shows like circuits designated with like numerals, further includes an interface **60** for digital

signal processing. The send and receive options required for scanning and printing are provided by interface **60**, which may, for example, be a chip set such as PEB 2091 N-V4.4 and EPB 2186 N-V4.4, manufactured by Siemens. Any other chip set having similar operating characteristics may be employed. As other digital signal formats come into use, such as ADSL (Asymmetric Digital Subscriber Line) HDSL (High Bit Rate Digital Subscriber Line), or the like, a chip set for handling such formats may be substituted for interface **60**.

As shown in FIG. **2***i*, a RAM and/or Fixed Disk **70** may be incorporated into the interface **10**, integrated with a fax modem **30** to allow for the capture of images or documents for later transfer into the PC **40** or the facsimile machine **30**, or for image enhancement within the interface configuration **10**. The addition of the data storage feature is particularly desirable for the fax machine or fax modem when they are in normal fax send or receive modes.

Optionally, the data storage feature is desirable for field application usage where information may be downloaded from a PC and stored in interface **10** for later transfer to a facsimile machine or a PC. Storage would be retained in this instance by battery backup incorporated in the RAM memory **70**. Battery backup is not necessary for fixed disk storage.

FIG. **2***j* shows an arrangement for automated scanning and printing functions between a fax modem and a fax machine.

As represented in FIGS. **2***a*-**2***f*, in order to activate an automated process for scanning or printing, the ring circuit **4** (FIG. **1**) interfaces with the Tip and Ring features of the fax modem or fax machine. This is dependent on keying in a code on the fax keypad, such as ## or #* or any other predetermined code in order to respectively identify the scanning and printing functions. Interface **10** detects the tones generated by the inserted code (at the tone receiver **25** and generates a ring signal. The ring signal is detected and interpreted by the ring detect circuit-of the fax modem or the fax machine. The fax modem or fax machine then generates receive signals or tones which indicate a connection. The fax modem or fax machine commences the scanning of the fax image or print cycle.

By depressing a predetermined code such as ## on the fax machine key pad, the tone detector circuit **25** interprets this code, enabling a control circuit to activate first (**26**) and second (**27**) relay means. Relay **26** disconnects the fax machine and the fax modem (connected to the PC) from the Central Office terminal lines. Relay **27**, then connects 9V to the ring generator circuit **14** causing a sinusoidal ring signal of a predetermined frequency and amplitude to be generated to the PC fax modem. The PC fax modem answers and starts the scanning process from the fax machine to the PC.

A communication program stored in the PC allows the code #* (for example) to be entered, generating the tone signal from the fax modem. The tone detector circuit in the interface **10** interprets this code, enabling a control circuit to activate first (**26**) and second (**27**) relay means. Relay **26** disconnects the fax machine and the fax modem (connected to the PC) from the Central Office terminal lines. Relay **27**, then connects 9V to the ring generator circuit **14** causing a sinusoidal ring signal of a predetermined frequency and amplitude to be generated to the fax machine. The fax machine answers and starts the printing process from the PC fax modem.

The switch version does not require the ## or #* or any other code, but activates the automated scanning/printing by pressing the ringer button B2.

The provision of the scan and print functions internal to the facsimile machine may also be accomplished by utilizing the analog output of the optical scanning circuit **75** of the facsimile machine (FIG. **2***g*). The analog signals are processed by the control/modem circuitry **76** where they are converted into a digital serial signal and then transmitted through the RS **232** sending interconnect port, the signal is then received by an RS**232** connector at the PC. The aforementioned procedure utilizes unused signal lines which are available on most modem chips such as the Rockwell chip series.

A send and receive driver software Package then implements the following action. The receive driver software accepts the digital image for storage or processing as appropriate. This send/receive driver communications software package also has the ability to send a digital image to the facsimile machine for printing purposes. The facsimile machine's control/modem circuitry **76** receives the digital image data and it's then-processed by the print driver **77** for printing. This linkage method for scanning and printing utilizing a fax machine is particularly useful for a computer without a fax modem. Any available send/receive communications software package is acceptable.

The commands of ## or #* for sending and receiving are still appropriate for this application although any other desired commands may be selected.

For the automated operation, the circuitry **10** of FIG. **1** is provided with device **25** which includes an automatic tone detector circuit for receiving a unique number dialed by either the facsimile machine or the PC modem. Upon recognition of the unique number, as set forth above or by generation using other techniques, the tone receiver **25** operates a driver circuit **26** for operating switch SW2 to decouple the PC and the facsimile machine from their associated telephone lines and for connecting the PC to the facsimile machine. Driver circuit **26** may be a relay or its equivalent for operating an armature (not shown) to move the switch arms between their two operating states. Driver unit **27** which likewise may be a relay or its equivalent, operates the switch SW1 to the position energizing the ringing circuit **14**. A timer is set and when two seconds elapses, unit **27** is deenergized causing the off-hook signal to be generated by current generator circuit **12** through the release of the operating button. When printing or scanning is complete, the tone receiver unit is reset. A simplified flow diagram of the aforementioned operation is shown in FIG. **1***a*.

The circuitry of the present invention is highly simplified in design and provides effective communication between the PC and local facsimile machine enabling the local facsimile machine to provide the dual functions of operating independently for transmission or reception to remote facsimile machines as well as functioning as a scanner or printer with a local PC. The circuitry of the present invention provides all the necessary signal conditions which lead the PC and local facsimile machine to believe that they are communicating with one another over a telephone line. The facsimile machine, although operating in its normal fashion, functions very effectively as a scanner or printer as and when needed and provides a scanning or printing capability at a mere fraction of the cost of conventional scanners or printers.

Simple switching of SW2 returns the PC and facsimile machine to normal use.

The novel ring circuit provides the required ring signal which is conventional in present-day facsimile transmission application through the employment of an inexpensive, low voltage, DC battery or 9V power source and, through the operation of two switches incorporated in the novel interface circuitry of the present invention, followed by operation of the facsimile start switch, provides an interface circuit which is extremely easy to use and which eliminates the need for more complicated and expensive microprocessor-based devices.

A latitude of modification, change and substitution is intended in the foregoing disclosure, and in some instances, some features of the invention will be employed without a corresponding use of other features. Accordingly, it is appropriate that the appended claims be construed broadly and in a manner consistent with the spirit and scope of the invention herein described.

What is claimed is:

1. A method of transferring digital image data signals between a computer equipped with send/receive driver communications software and a facsimile machine to cause said facsimile machine to operate as a printing device, comprising the steps of:

(a) coupling the facsimile machine to the computer through a bi-directional direct connection via a passive link;

(b) conditioning the facsimile machine to receive print image data from the computer;

(c) conditioning the computer for initiating transmission of print image digital data to said facsimile machine of a document to be printed by said facsimile machine:

(d) upon activating the send driver communications software of the computer the print image digital data from the computer is transferred without interruption through a receiving port of the facsimile machine, whereby the print image digital signals of the computer are processed by the facsimile machine into signals for printing.

2. A method of connecting the scan or print apparatus of a facsimile machine configuration to a computer, in order to support image data transmissions for scanning or printing between the facsimile machine and the computer, comprising the steps of:

coupling the facsimile machine to the computer through a bi-directional direct connection via a passive link between the facsimile machine and the computer; conditioning a scan or print mode for the facsimile machine and the computer, as needed;

conditioning the transmission of image data signals between the facsimile machine and the computer for the selected scan or print mode;

said computer being equipped with send/receive driver communications software enabling the sending of image data to the facsimile machine for printing or receiving of the scanned facsimile machine image data by the computer for use as needed.

3. The method of claim 2, including transferring serial or parallel digital signals of scan or print data images between said facsimile machine and said computer as needed.

4. The method of claim 2, including transferring a digital data source signal of a scan or print data image between said facsimile machine and said computer as needed.

5. The method of claim 2 further comprising optically recognizing the scanned data within the computer and converting the scanned data into character codes within the computer, said computer being equipped with Optical Character Recognition Software.

6. A method of using a facsimile machine operably linked to a computer to print transmitted digital image data received from a computer by the facsimile machine, or scan digital image data transmitted from the facsimile machine to the computer through a bi-directional direct connection via a passive link, the method comprising:

(a) providing the bi-directional direct connection via a passive link for transfer of digital image data representative of images between the computer and the facsimile machine;

(b) activating a print or scan mode on the computer and facsimile machine, said computer or facsimile machine being equipped with send and receive driver communications software enabling the transfer of the digital image data between the computer and the facsimile machine; and

(c) transmitting the digital image data from the computer to the facsimile machine for printing, or transmitting scanned digital image data from the facsimile machine to the computer, over the bi-directional direct connection via the passive link in accordance with an instruction.

* * * * *

US007489423C1

(12) EX PARTE REEXAMINATION CERTIFICATE (8994th)

United States Patent
Nachman et al.

(10) **Number: US 7,489,423 C1**
(45) **Certificate Issued: May 1, 2012**

(54) **INTERFACE CIRCUIT FOR UTILIZING A FACSIMILE MACHINE COUPLED TO A PC AS A SCANNER OR PRINTER**

(75) Inventors: **Bruce Gregory Nachman**, Wayne, PA (US); **Marvin Jules Nachman**, legal representative, Villanova, PA (US)

(73) Assignee: **Infinity Computer Products, Inc.**, Villanova, PA (US)

Reexamination Request:
No. 90/009,902, Apr. 19, 2011

Reexamination Certificate for:

Patent No.:	**7,489,423**
Issued:	**Feb. 10, 2009**
Appl. No.:	**11/084,297**
Filed:	**Mar. 19, 2005**

Related U.S. Application Data

(60) Division of application No. 08/669,056, filed on Jun. 24, 1996, now Pat. No. 6,894,811, which is a continuation-in-part of application No. 08/226,278, filed on Apr. 11, 1994, now Pat. No. 5,530,558.

(51) **Int. Cl.**
H04N 1/32 (2006.01)
H04N 1/04 (2006.01)

(52) **U.S. Cl.** **358/442**; 358/468; 358/474; 358/296; 379/100.01

(58) **Field of Classification Search** ..... None
See application file for complete search history.

(56) **References Cited**

To view the complete listing of prior art documents cited during the proceeding for Reexamination Control Number 90/009,902, please refer to the USPTO's public Patent Application Information Retrieval (PAIR) system under the Display References tab.

Primary Examiner—Colin Larose

(57) **ABSTRACT**

Apparatus for interfacing a conventional facsimile machine with a PC enabling the use of the facsimile machine as a scanner or printer. A first switch assembly selectively couples the PC modem and facsimile machine either to independent telephone lines in a normal mode or to one another in a scan/print mode. A manually operated switch assembly is depressed for a brief interval sufficient to activate a ringing circuit which converts DC power from a small battery source to a 20 Hz sine wave of 90 volt amplitude and applies the sine wave signal to the PC to cause the PC or facsimile to enter into a scan or print mode, respectively. The manually operable switch is then released to apply a constant current to the facsimile machine to simulate an off-hook condition. A facsimile machine start button is then operated to start the facsimile machine which scans documents provided therein and transmits the scanned data in a conventional facsimile transmission format or activate the PC to transmit a fax in conventional facsimile transmission format to utilize the facsimile machine as a printer. The PC may be equipped with a suitable software program for converting non-graphic, i.e. such as word-type information into a binary format suitable for use in word processing applications and may store the data in a memory for subsequent use. An automatic circuit may be provided to initiate a scanning or printing mode responsive to receipt of a unique number received from either the facsimile machine or the PC, thus eliminating the need for switches.

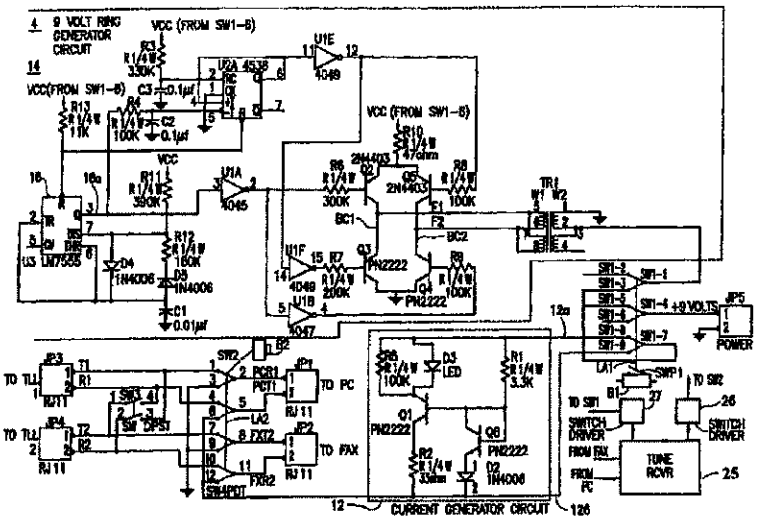

EX PARTE REEXAMINATION CERTIFICATE ISSUED UNDER 35 U.S.C. 307

THE PATENT IS HEREBY AMENDED AS INDICATED BELOW.

Matter enclosed in heavy brackets [ ] appeared in the patent, but has been deleted and is no longer a part of the patent; matter printed in italics indicates additions made to the patent.

AS A RESULT OF REEXAMINATION, IT HAS BEEN DETERMINED THAT:

Claims **1**, **2**, **6** are determined to be patentable as amended.

Claims **3-5** dependent on an amended claim, are determined to be patentable.

1. A method of transferring digital image data signals between a computer equipped with *generic* send/receive driver communications software and a facsimile machine to cause said facsimile machine to operate as a printing device, comprising the steps of:

(a) coupling the facsimile machine to the computer through a bi-directional direct connection via a passive link;

(b) conditioning the facsimile machine to receive print image data from the computer;

(c) conditioning the computer for initiating transmission of print image digital data to said facsimile machine of a document to be printed by said facsimile machine;

(d) upon activating the *generic* send driver communications software of the computer the print image digital data from the computer is transferred without interruption through a receiving port of the facsimile machine, whereby the print image digital signals of the computer are processed by the facsimile machine into signals for printing.

2. A method of connecting the scan or print apparatus of a facsimile machine configuration to a computer, in order to support image data transmissions for scanning or printing between the facsimile machine and the computer, comprising the steps of:

coupling the facsimile machine to the computer through a bi-directional direct connection via a passive link between the facsimile machine and the computer; conditioning a scan or print mode for the facsimile and the computer, as needed;

conditioning the transmission of image data signals between the facsimile machine and the computer for the selected scan or print mode;

said computer being equipped with *generic* send/receive driver communications software enabling the sending of image data to the facsimile machine for printing or receiving of the scanned facsimile machine image data by the computer for use as needed.

6. A method of using a facsimile machine operably linked to a computer to print transmitted digital image data received from a computer by the facsimile machine, or scan digital image data transmitted from the facsimile machine to the computer through a bi-directional direct connection via a passive link, the method comprising:

(a) providing the bi-directional direct connection via a passive link for transfer of digital image data representative of images between the computer and the facsimile machine;

(b) activating a print or scan mode on the computer and facsimile machine, said computer or facsimile machine being equipped with *generic* send and receive driver communications software enabling the transfer of the digital image data between the computer and the facsimile machine; and

(c) transmitting the digital image data from the computer to the facsimile machine for printing, or transmitting scanned digital image data from the facsimile machine to the computer, over the bi-directional direct connection via the passive link in accordance with an instruction.

* * * * *

EXHIBIT C

US008040574B2

(12) **United States Patent**
Nachman

(10) **Patent No.: US 8,040,574 B2**
(45) **Date of Patent: *Oct. 18, 2011**

(54) **INTERFACE CIRCUIT FOR UTILIZING A FACSIMILE MACHINE TO A PC AS A SCANNER OR PRINTER**

(75) Inventor: **Bruce Gregory Nachman**, Villanova, PA (US); **Marvin Nachman**, legal representative, Villanova, PA (US)

(73) Assignee: **Infinity Computer Products Inc.**, Villanova, PA (US)

(*) Notice: Subject to any disclaimer, the term of this patent is extended or adjusted under 35 U.S.C. 154(b) by 287 days.

This patent is subject to a terminal disclaimer.

(21) Appl. No.: **12/322,908**

(22) Filed: **Feb. 9, 2009**

(65) **Prior Publication Data**

US 2009/0237742 A1 Sep. 24, 2009

Related U.S. Application Data

(60) Continuation of application No. 11/084,297, filed on Mar. 19, 2005, now Pat. No. 7,489,423, which is a division of application No. 08/669,056, filed on Jun. 24, 1996, now Pat. No. 6,894,811, which is a continuation-in-part of application No. 08/226,278, filed on Apr. 11, 1994, now Pat. No. 5,530,558.

(51) **Int. Cl.**
H04N 1/32 (2006.01)
H04N 1/04 (2006.01)

(52) **U.S. Cl.** **358/442**; 358/468; 358/474; 358/296; 379/100.01

(58) **Field of Classification Search** 358/442, 358/468, 474, 296, 440, 1.15, 1.6, 434–437, 358/1.13; 379/100.01, 100.02, 100.06, 100.05, 379/100.13, 93.1

See application file for complete search history.

(56) **References Cited**

U.S. PATENT DOCUMENTS

3,558,811 A 1/1971 Montevecchio

(Continued)

FOREIGN PATENT DOCUMENTS

CN 1069155 A 2/1993

(Continued)

OTHER PUBLICATIONS

English Language Abstract of CN1069155; Feb. 17, 1993.
English Language Abstract of JP5014580; Jan. 22, 1993.
English Language Abstract of JP6070083; Mar. 11, 1994.
English Language Abstract of JP3038163; Feb. 19, 1991.
English Language Abstract of JP4033061; Feb. 4, 1992.

(Continued)

Primary Examiner — Cheukfan Lee

(57) **ABSTRACT**

Apparatus for interfacing a conventional facsimile machine with a PC enabling the use of the facsimile machine as a scanner or printer. A first switch assembly selectively couples the PC modem and facsimile machine either to independent telephone lines in a normal mode or to one another in a scan print mode. A manually operated switch assembly is depressed for a brief interval sufficient to activate a ringing circuit which converts DC power from a small battery source to a 20 Hz sine wave of 90 volt amplitude and applies the sine wave signal to the PC to cause the PC or facsimile to enter into a scan or print mode, respectively. The manually operable switch is then released to apply a constant current to the facsimile machine to simulate an off-hook condition. A facsimile machine start button is then operated to start the facsimile machine which scans documents provided therein and transmits the scanned data in a conventional facsimile transmission format or activate the PC to transmit a fax in conventional facsimile transmission format to utilize the facsimile machine as a printer. The PC may be equipped with a suitable software program for converting non-graphic, i.e. such as word-type information into a binary format suitable for use in word processing applications and may store the data in a memory for subsequent use. An automatic circuit may be provided to initiate a scanning or printing mode responsive to receipt of a unique number received from either the facsimile machine or the PC, thus eliminating the need for switches.

8 Claims, 11 Drawing Sheets

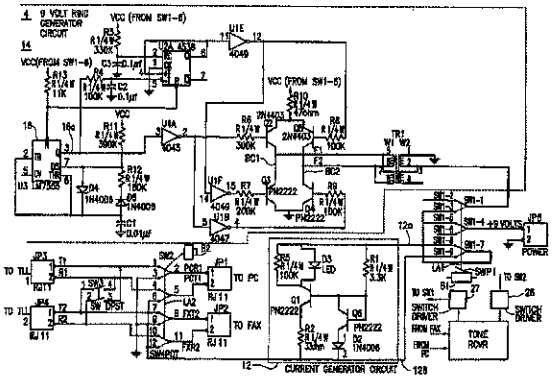

U.S. PATENT DOCUMENTS

4,607,289	A	8/1986	Kurokawa
4,802,204	A	1/1989	Chang
4,816,911	A	3/1989	Kirsch et al.
4,868,672	A	9/1989	Hiroki et al.
4,910,607	A	3/1990	Kita et al.
4,964,154	A	10/1990	Shimotono
4,989,163	A	1/1991	Kawamata et al.
4,991,200	A	2/1991	Lin
5,021,892	A	6/1991	Kita et al.
5,175,750	A	12/1992	Donovan et al.
5,216,517	A	6/1993	Kinoshita et al.
RE34,429	E	11/1993	Baran et al.
5,297,146	A	3/1994	Ogawa
5,390,031	A	2/1995	Kang et al.
5,425,135	A	6/1995	Motoyama et al.
5,452,106	A	9/1995	Perkins
5,459,579	A	10/1995	Hu et al.
5,528,385	A	6/1996	Manning
5,530,554	A	6/1996	Maehara
5,532,844	A	7/1996	Kagami et al.
5,552,901	A	9/1996	Kikuchi et al.
5,588,047	A	12/1996	Rosengren et al.
5,590,339	A	12/1996	Chang
H1677	H	9/1997	Hu et al.
5,680,227	A	10/1997	Picard
5,684,607	A	11/1997	Matsumoto
5,847,843	A	12/1998	Shibata et al.
5,872,901	A	2/1999	Komo et al.
5,914,789	A	6/1999	Murata
6,064,491	A	5/2000	Matsumoto
6,307,639	B1	10/2001	Eom et al.
6,519,057	B1	2/2003	Kurosawa et al.
7,099,050	B2	8/2006	Motoyama
7,262,871	B2	8/2007	Matsueda et al.
2003/0200403	A1	10/2003	Niwa et al.

FOREIGN PATENT DOCUMENTS

DE	4239349 A1	9/1994
DE	4312136 A1	10/1994
EP	0655852 B1	5/1995
JP	63-187960	3/1988
JP	64-22166	1/1989
JP	1-168161	7/1989
JP	2-151459	6/1990
JP	3-38163	2/1991
JP	4-33061	2/1992
JP	5-14580	1/1993
JP	5-189104	7/1993
JP	6-54106	2/1994
JP	6-54107	2/1994
JP	6-70083	3/1994
WO	WO 95/19089	7/1995

OTHER PUBLICATIONS

English Language Abstract of JP1168161; Jul. 3, 1989.
English Language Abstract of JP2151459; Jun. 11, 1990.
English Language Abstract of JP5189104; Jul. 30, 1993.
English Language Abstract of DE4312136; Oct. 20, 1994.
English Language Abstract of DE4239349; Sep. 22, 1994.
RS-232C Interface Kit for Fax-L770, Technical Specifications, CANON1990.
Fax-L770 RS-232C Service Manual, Revision 0, CANON, Feb. 1991.
English Language Abstract of JP63187960; Aug. 3, 1988.
Abstract of "Turning Microcomputers into Fax Machines"; Lu, Cary; High Technology; vol. 7, Iss. 3; pp. 60-61; Mar. 1987.
"Okidata deploys i960 in multi-use peripheral—Doc-It peripheral device-Product Announcement"; Electronic News; Sep. 28, 1992.
"Company News; New Product from Okidata"; The New York Times; Sep. 29, 1992.
Abstract of "Rockwell International's low cost RFX96V12 MONOFAX fax modem chip"; Newsbytes News Network, Mar. 15, 1994.
"Information Delivery and Fax Technology"; Hawkins; Online, pp. 98-101; Jul. 1990.
"Personal Computer Image Communications Using Facsimile"; IEEE Journal on Selected Areas in Communications, vol. 7, No. 2, pp. 276-282; Feb. 1989.
Abstract of "Pursuing One Peripheral"; Blankenhorn, Dana; Barrington, vol. 34, Iss. 20, pp. 71-73; Oct. 15, 1988.

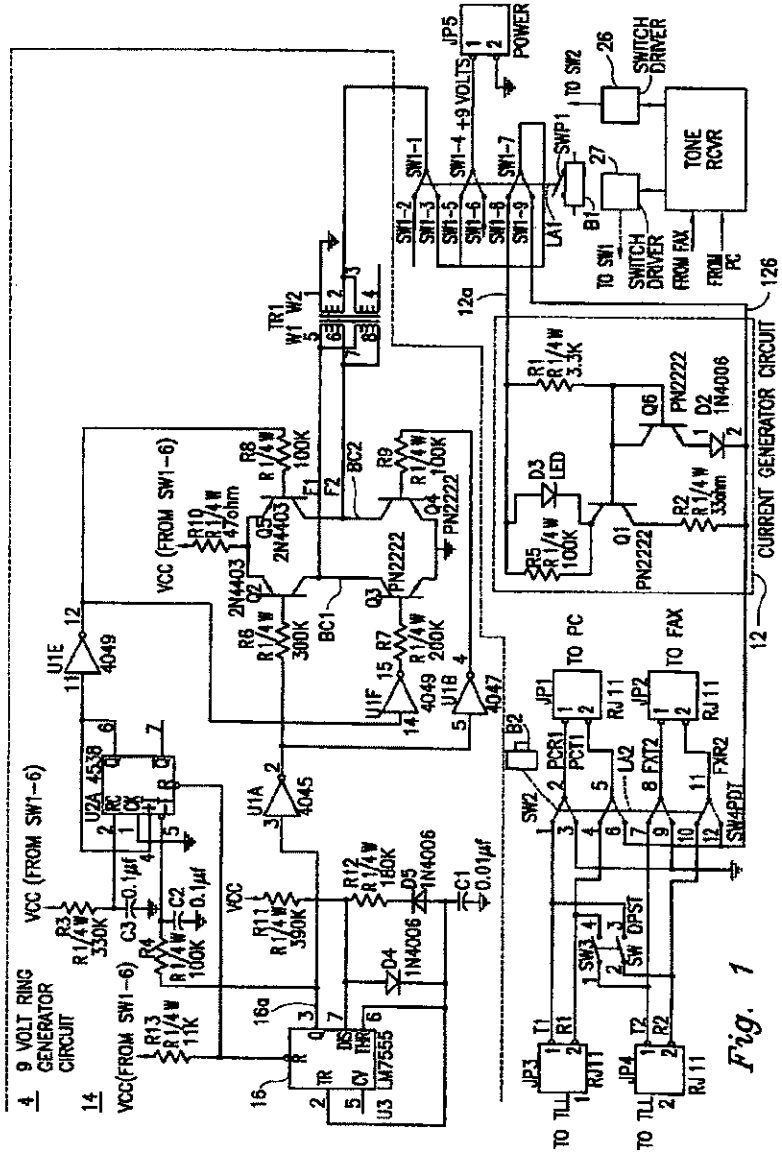
9 VOLT RING GENERATOR CIRCUIT
CURRENT GENERATOR CIRCUIT
TONE RCVR
SWITCH DRIVER
POWER
+9 VOLTS
TO SW2
TO SW1
FROM FAX
FROM PC
TO PC
TO FAX
TO TL
VCC (FROM SW1-6)
VCC(FROM SW1-6)
LM7555
4049
4047
4045
4538
2N4403
PN2222
1N4006
RJ11
SW4PDT
SW DPST

Fig. 1

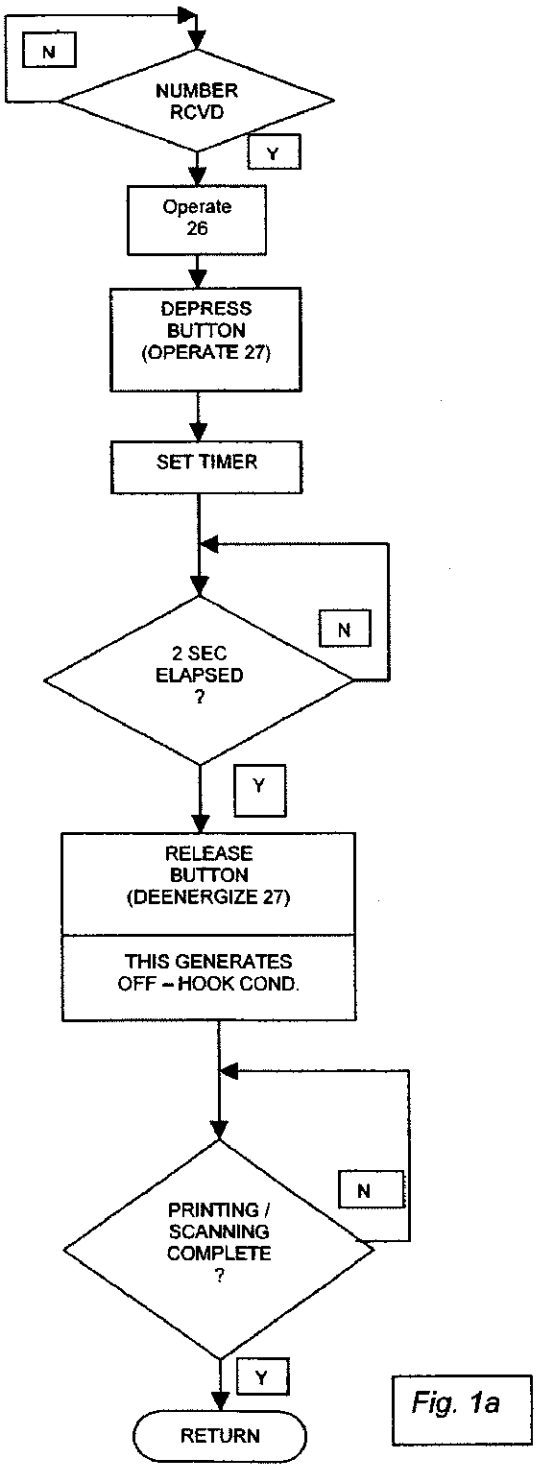
N
NUMBER RCVD
Y
Operate 26
DEPRESS BUTTON (OPERATE 27)
SET TIMER
N
2 SEC ELAPSED ?
Y
RELEASE BUTTON (DEENERGIZE 27)
THIS GENERATES OFF – HOOK COND.
N
PRINTING / SCANNING COMPLETE ?
Y
RETURN

Fig. 1a

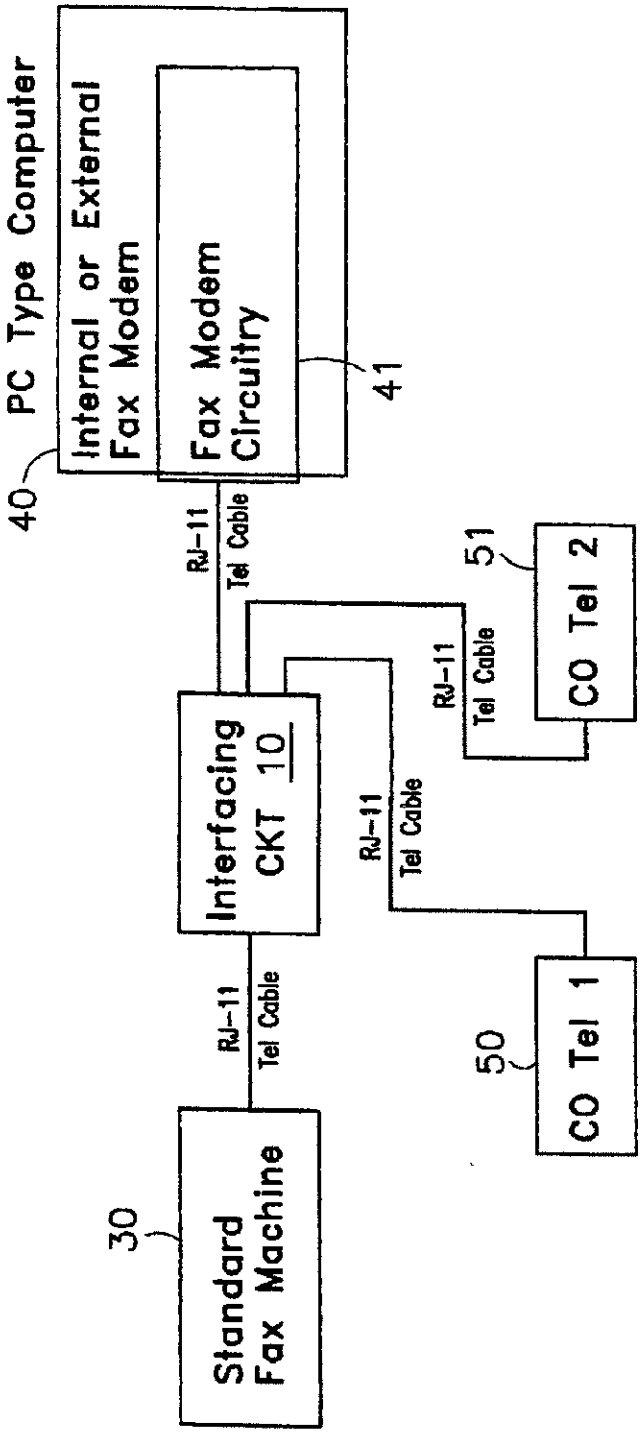
PC Type Computer
Internal or External Fax Modem
Fax Modem Circuitry
40
41
RJ-11
Tel Cable
Interfacing CKT 10
RJ-11
Tel Cable
Standard Fax Machine
30
RJ-11
Tel Cable
CO Tel 1
50
RJ-11
Tel Cable
CO Tel 2
51

Fig. 2a

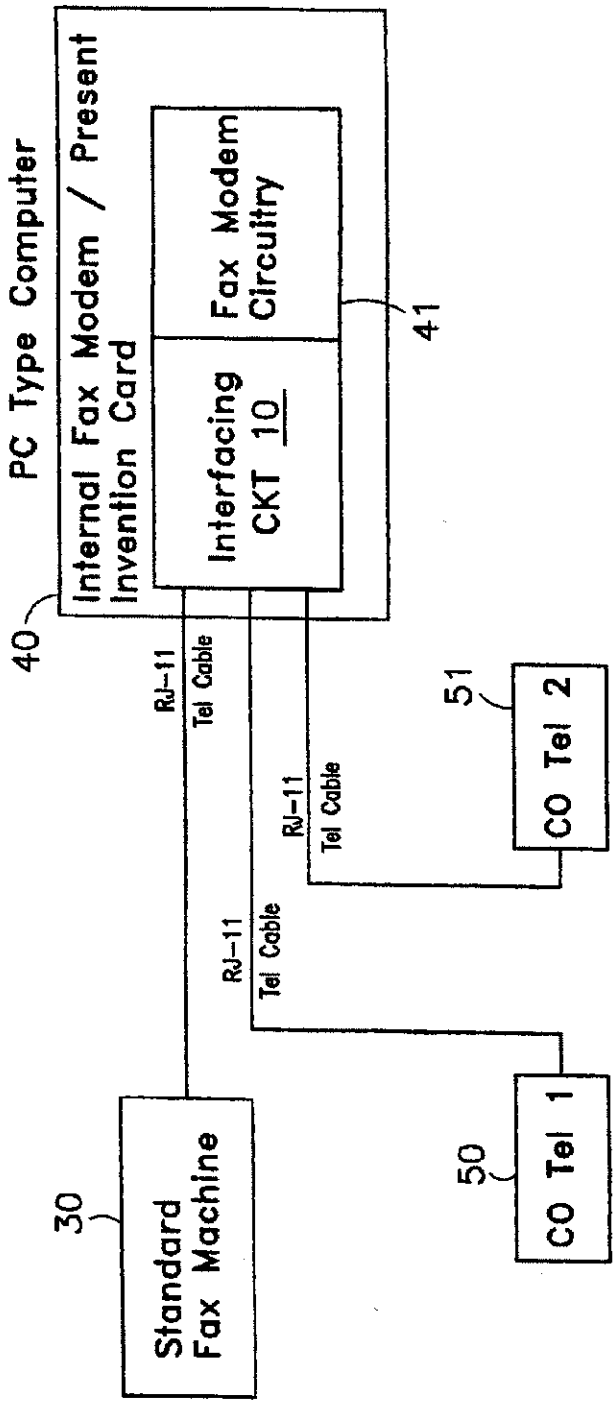
PC Type Computer
Internal Fax Modem / Present Invention Card
Interfacing CKT 10
Fax Modem Circuitry
40
41
RJ-11
Tel Cable
RJ-11
Tel Cable
RJ-11
Tel Cable
51
CO Tel 2
50
CO Tel 1
30
Standard Fax Machine

Fig. 2b

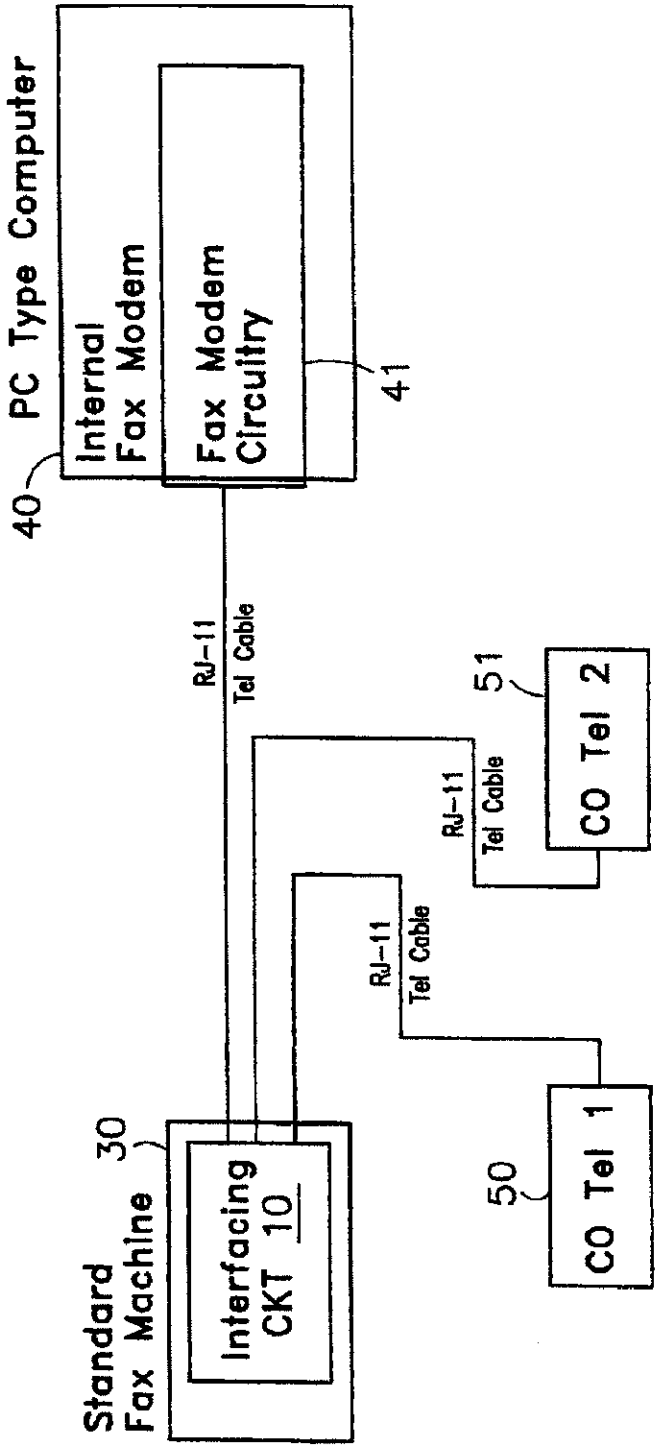
PC Type Computer
Internal Fax Modem
Fax Modem Circuitry
40
41
RJ-11 Tel Cable
RJ-11 Tel Cable
RJ-11 Tel Cable
51
CO Tel 2
50
CO Tel 1
30
Standard Fax Machine
Interfacing CKT 10

Fig. 2c

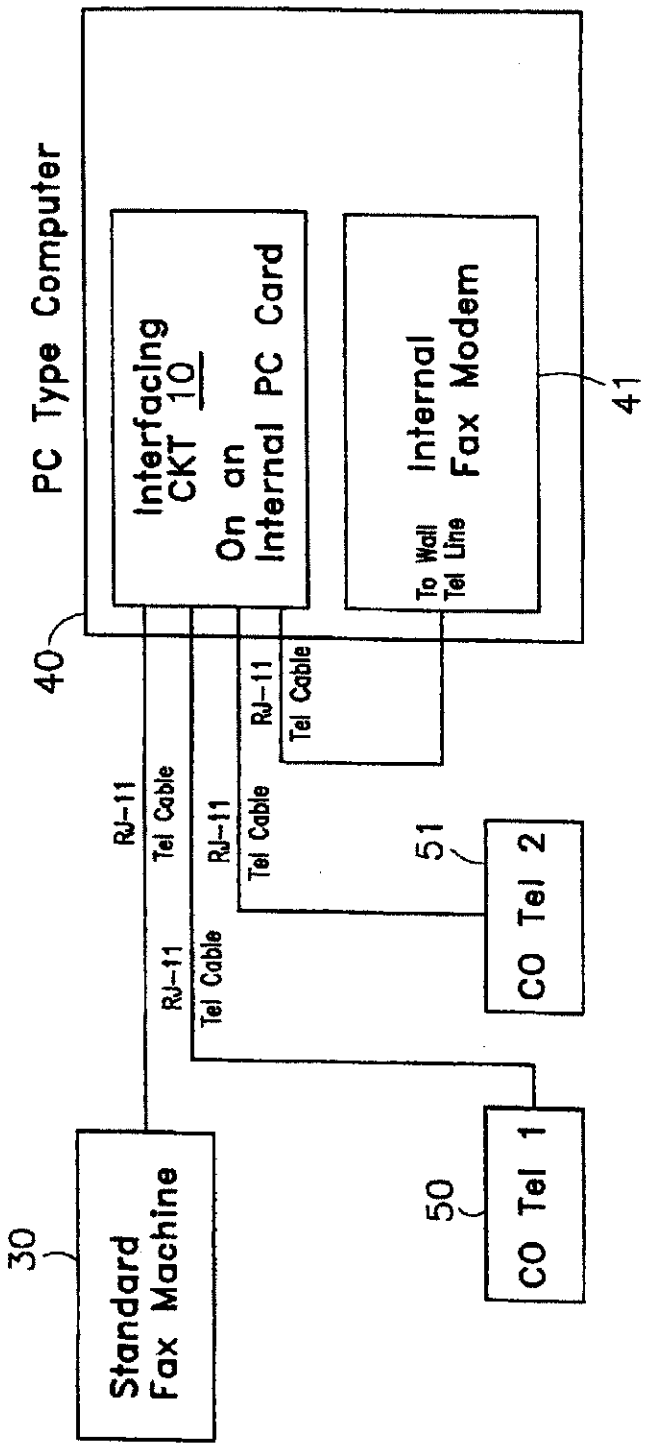
PC Type Computer
Interfacing CKT 10 On an Internal PC Card
Internal Fax Modem
To Wall Tel Line
40
41
RJ-11
Tel Cable
RJ-11
Tel Cable
RJ-11
Tel Cable
RJ-11
Tel Cable
51
CO Tel 2
50
CO Tel 1
30
Standard Fax Machine

Fig. 2d

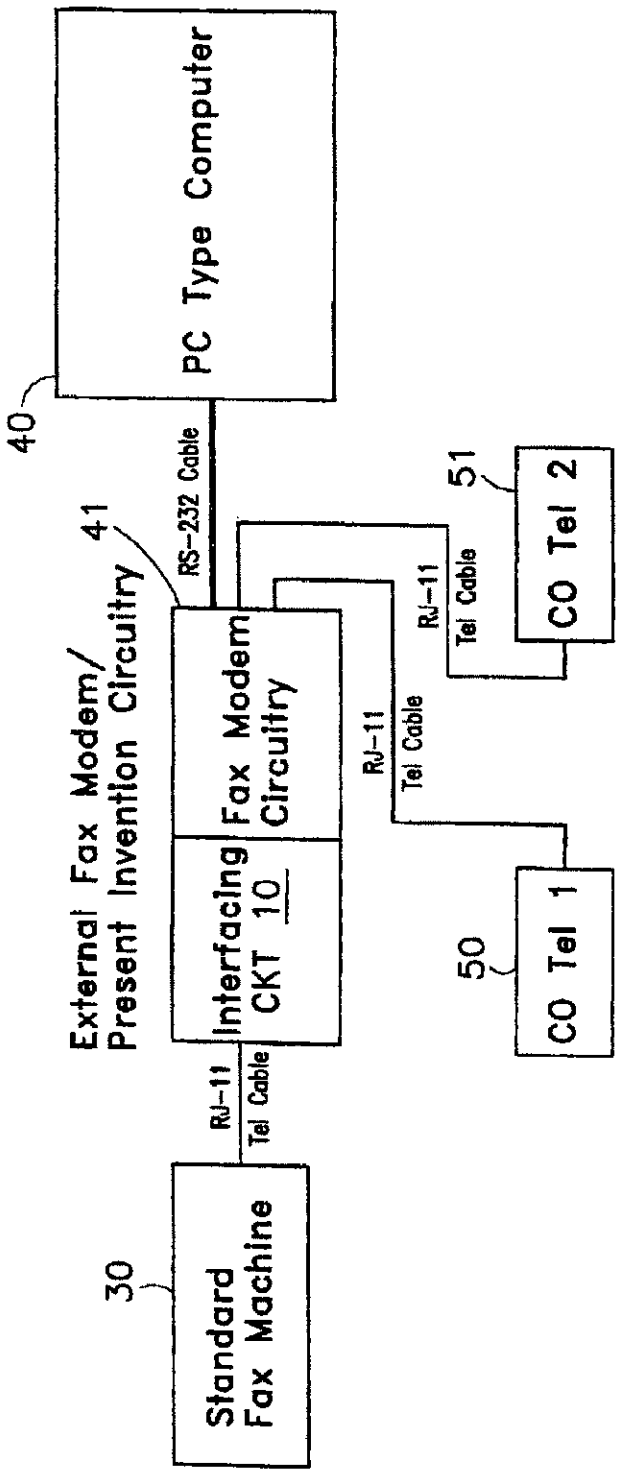
PC Type Computer
40
RS-232 Cable
41
External Fax Modem/
Present Invention Circuitry
Fax Modem
Circuitry
Interfacing
CKT 10
RJ-11
Tel Cable
RJ-11
Tel Cable
RJ-11
Tel Cable
51
CO Tel 2
50
CO Tel 1
30
Standard
Fax Machine

Fig. 2e

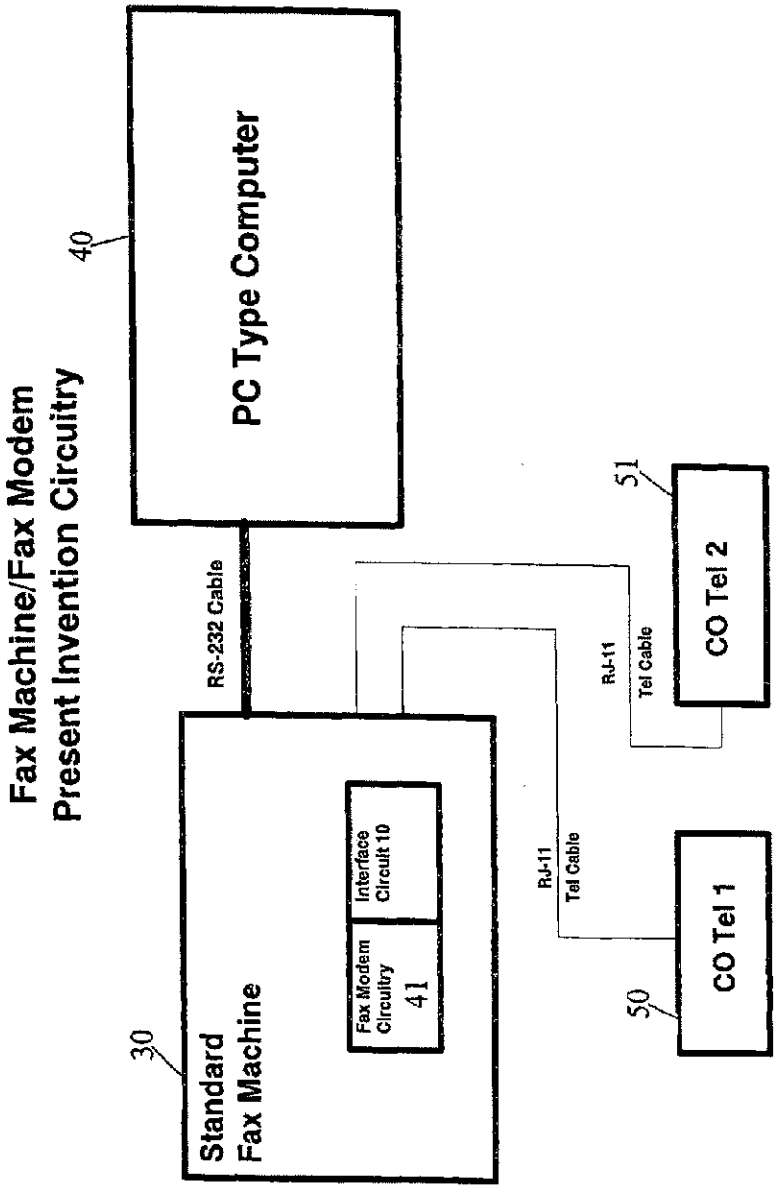
Fax Machine/Fax Modem
Present Invention Circuitry
40
PC Type Computer
RS-232 Cable
30
Standard
Fax Machine
Fax Modem
Circuitry
41
Interface
Circuit 10
RJ-11
Tel Cable
RJ-11
Tel Cable
50
CO Tel 1
51
CO Tel 2

Fig. 2f

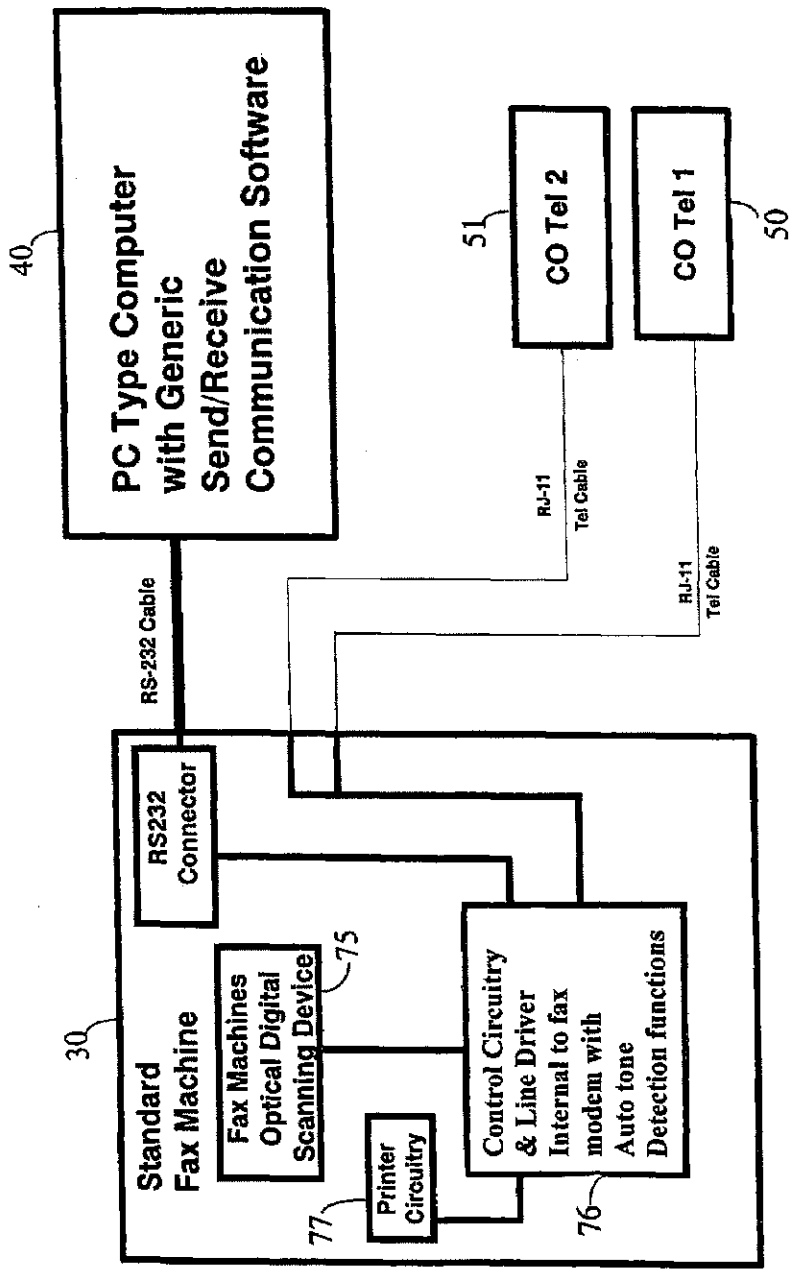
PC Type Computer with Generic Send/Receive Communication Software
40
RS-232 Cable
RJ-11 Tel Cable
RJ-11 Tel Cable
CO Tel 2
51
CO Tel 1
50
Standard Fax Machine
30
RS232 Connector
Fax Machines Optical Digital Scanning Device
75
Printer Circuitry
77
Control Circuitry & Line Driver Internal to fax modem with Auto tone Detection functions
76

Fig. 2g

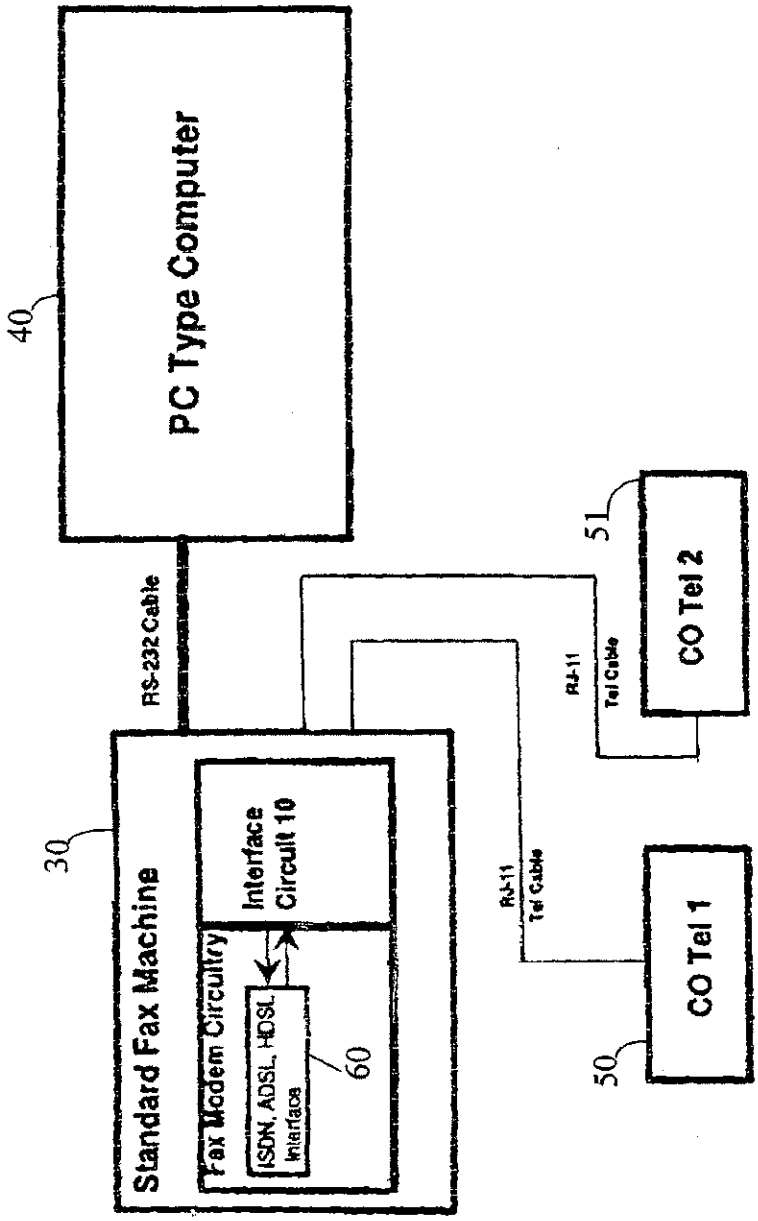
PC Type Computer
40
RS-232 Cable
Standard Fax Machine
30
Interface Circuit 10
Fax Modem Circuitry
ISDN, ADSL, HDSL Interface
60
RJ-11 Tel Cable
RJ-11 Tel Cable
CO Tel 1
50
CO Tel 2
51

Fig. 2h

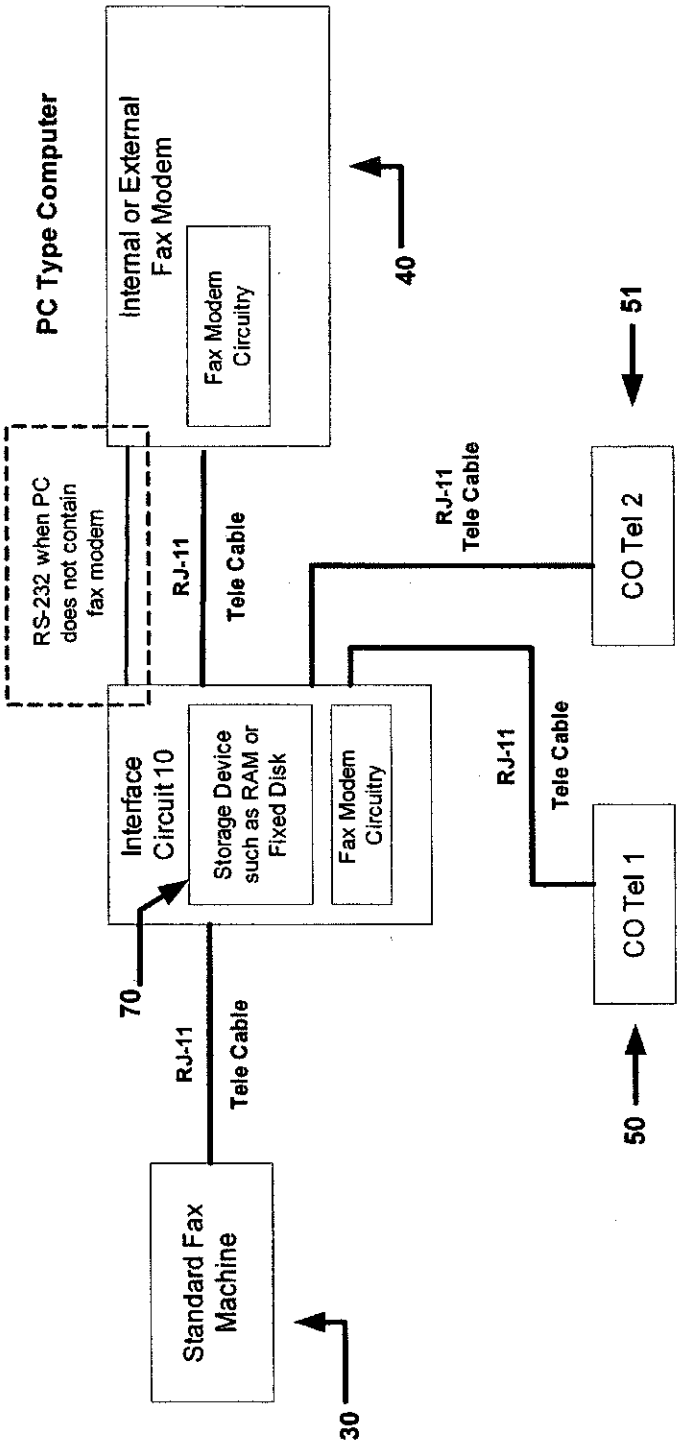
PC Type Computer
Internal or External Fax Modem
Fax Modem Circuitry
40
RS-232 when PC does not contain fax modem
RJ-11
Tele Cable
RJ-11 Tele Cable
51
CO Tel 2
Interface Circuit 10
Storage Device such as RAM or Fixed Disk
Fax Modem Circuitry
RJ-11
Tele Cable
CO Tel 1
70
RJ-11
Tele Cable
50
Standard Fax Machine
30

Fig. 2i

INTERFACE CIRCUIT FOR UTILIZING A FACSIMILE MACHINE TO A PC AS A SCANNER OR PRINTER

This application is a Continuation of application Ser. No. 11/084,297 filed Mar. 19, 2005, now U.S. Pat. No. 7,489,423, which is a Divisional of Continuation-in-Part application Ser. No. 08/669,056, filed Jun. 24, 1996, which issued as U.S. Pat. No. 6,894,811, which is a Continuation-in-Part of application Ser. No. 08/226,278, filed Apr. 11, 1994, which issued as U.S. Pat. No. 5,530,558.

The following represents a true and accurate copy of application Ser. No. 11/084,297.

Claims **1**, **7**, and **10**, herein are representative of the preceding disclosure application Ser. No. 08/669/056, and germane to the invention as claimed in this Continuation application.

FIELD OF THE INVENTION

The present invention relates to interfacing a facsimile with a PC and more particularly to an interface circuit of highly simplified design and including a novel ringing circuit capable of generating a sign wave of a given amplitude and frequency from a small, portable DC battery or 9V DC power supply.

BACKGROUND OF THE INVENTION

As is well known in the art, a conventional facsimile scans documents and transmits the scanned information through a modem in a standard facsimile format to a remote facsimile which receives the transmitted data by a modem and converts the transmitted data into a form for printing a document which is a replica of the document scanned by the transmitting facsimile. Scanning and printing devices especially adapted for use with PCs (i.e. personal computers) are relatively expensive devices typically costing many hundreds of dollars to as much as several thousands of dollars for applications requiring character recognition capabilities.

It has been recognized that conventional facsimile machines may be utilized as scanners or printers for PCs. However, the interface devices presently available are both complicated and expensive and typically require a microprocessor which further tends to increase both cost and circuit complexity.

OBJECT OF THE INVENTION

It is, therefore, a principal object of the present invention to provide a circuit for interfacing a PC and a facsimile to enable the facsimile to be utilized as a scanner or a printer for a PC and to accomplish all of the objectives of a scanner or a printer in a simple straightforward manner through the use of a circuit of highly simplified design and low cost.

BRIEF DESCRIPTION OF THE INVENTION

The present invention achieves all of the above as well as other objectives through apparatus which is characterized by comprising first switch means capable of selectively coupling a PC modem and a facsimile modem to independent telephone lines when in a non-scanning/printing mode and for decoupling the PC and facsimile modems from the telephone lines and coupling these modems to one another when placed in a scanning/printing mode.

Second manually operable switch means activates a novel ringing circuit which generates a sine wave of appropriate amplitude and frequency and applies this ringing circuit to the PC modem, when used as a scanner or to the facsimile when being used as a printer, causing the PC or facsimile machine to respond to the simulated transmit request.

Release of the circuitry operating button causes the interface circuitry to apply an off-hook condition to the facsimile. Document scanning or printing is initiated by pressing the facsimile start button or the start button provided as part of the PC or by a program step integrated into the PC as part of a print mode (selecting the facsimile as the output device for printing). Transmitted data may be directly stored in a PC memory. Documents incorporating alphanumeric data may be converted by a software program incorporated into the PC.

The ring generating circuit responsive to pressing of the operating button generates a transmit request signal by converting the low voltage from a DC source into a 20 cycle sine wave of 90 volt amplitude through the employment of a pulse generating circuit coupled to phase delay means and applying phase delayed and undelayed pulses to a transistorized switching circuit for selectively applying positive DC voltage to opposing inputs of a step-up transformer which applies a boosted sinusoidal ring signal to the PC modem, the ring generating circuit generating a ringing signal of the appropriate amplitude and frequency in a highly simplified and inexpensive manner. Since operation of the ringing circuit is completed in less than two seconds, a battery, if used, will have an extremely long operating life. Alternatively, if a 9V DC power source is used the battery is not required at all.

The simple, straightforward operation of only three switches eliminates the need for complicated, expensive and typically microprocessor-based circuitry.

BRIEF DESCRIPTION OF THE FIGURES

The above, as well as other objects of the present invention, will become apparent upon reading the accompanying description and drawings in which:

FIG. **1** is a circuit diagram of the interface circuitry of the present invention which enables a PC to utilize a conventional facsimile as a sophisticated scanner or printer.

FIG. **1***a* is a flow diagram of the circuitry of FIG. **1** employing the microprocessor-based tone detecting circuit of FIG. 1.

FIGS. **2***a*-**2***i* show simplified block diagrams of various system arrangements employing the circuitry of the present invention.

DETAILED DESCRIPTION OF THE INVENTION AND PREFERRED EMBODIMENTS THEREOF

FIG. **1** shows an interface circuit **10** embodying the principles of the present invention and being comprised of a switch assembly SW2 which is a four-pole double-throw switch having four movable switch arms SW**2-2**, SW**2-5**, SW**2-8**, and SW**2-11**, each cooperating with a pair of stationary contacts, as shown. For example, and for simplicity, note that switch arms SW**2-2** is switchable between stationary contacts SW**2-1** and SW**2-3**.

Movable switch arms SW**2-2**. SW**2-5**, SW**2-8** and SW**2-11** are all ganged to operate in unison as shown by common operating button B2 coupled to the switch arms through a linkage arm LA2 shown in schematic fashion as a dotted line. The switch is designed so that the switch arms are retained in the positions to which they are moved.

The switch arms are arranged in pairs, switch arms SW**2-2** and SW**2-5** selectively coupling a modem of a PC (not shown

for purposes of simplicity) to either a first telephone line #1 through jumper JP3 or directly to a local facsimile machine (not shown for purposes of simplicity) through a jumper terminal JP2.

In a similar fashion, a pair of switch arms SW2-8 and SW2-11 selectively couple the local facsimile machine through jumper JP2 to either a separate telephone line #2 (through jumper JP4) or to the modem of the PC.

A double-pole single-throw switch SW3 is provided to couple either the local facsimile machine or the PC modem to a single telephone line or alternatively, disconnects the PC modem and facsimile machine from the common telephone line. For example, in applications where both the local facsimile and the PC each have an independent, dedicated telephone line, switch SW3 remains open. In applications where only a single telephone line is provided, both PC and the local facsimile may share the single telephone line by gaining access thereto in a staggered manner.

Switch SW1 which is a three-pole, double-throw switch, comprises three movable switch arms SW1-1, SW1-4 and SW1-7, each movable switch arm cooperating with a pair of stationary switch arms.

Movable switch arm SW1-1 selectively couples the output terminal of the pair of secondary windings W2 of a step-up transformer TR1 either to stationary terminal SW1-2, which isolates the output of the transformer TR1 from the operating circuitry, or stationary contact SW1-3 which couples the secondary winding W2 of transformer TR1 through movable switch arm SW1-7 and stationary contact SW1-9 simultaneously to stationary contacts SW2-6 and SW2-12 of four-pole double-throw switch SW2 for simultaneous connection to the PC modem and the local facsimile, when switch arms SW2-5 and SW2-11 respectively engage stationary contacts SW2-6 and SW2-12.

Movable switch arm SW1-4 selectively couples a small nine volt (9V) DC source (through jumper J5) to either stationary switch arm SW1-5 for coupling nine volt (9V) DC to a current generator circuit 12 or alternatively coupling nine volt (9V) DC to stationary terminal SW1-6 which in turn provides DC power to the nine volt (9V) ring generator circuit arranged within the dotted region as shown.

Current generator circuit 12 is comprised of resistors R1, R2 and R5, transistors Q1 and Q6, diode D2 and LED-type diode D3 which are connected in the manner shown to provide a constant current which simulates an off-hook signal, utilized in the manner to be more fully described hereinbelow. Resistor R2 serves as a current limiting resistor. LED D3 lights to denote operation of the constant current generator.

Ring generator circuit 14, which is utilized to generate a 20 Hz sine wave of a 90 volt amplitude, comprises a 555-type timing circuit 16 which, when activated by a nine volt DC input, applied to timer 16 through terminal VCC and resistor R13, provides a pulse train of equal width, positive-going pulses at a pulse rate of approximately 20 Hz at its output 16*a*.

The pulse train generated by the 555 timer 16 is simultaneously applied to the input of inverter U1A whose output is simultaneously coupled to the base electrodes of transistors Q2 and Q4, through resistor R6 and through inverter U1B and resistor R9.

The pulse train, as was set forth hereinabove, is simultaneously coupled to the −T input of a one-shot multivibrator operating as a phase delay circuit and whose Q output is coupled to the input of inverter U1E. The Q output of one-shot multivibrator U2A provides a phase delayed pulse which is coupled through the output of inverter U1E simultaneously to the base of transistor Q5 through resistor R8 and to the base of transistor Q3 through inverter U1F and resistor R7. Transistors Q2-Q5 and resistors R6-R9, together with resistor R10, form a full bridge switching circuit which is powered by the nine volt (9V) DC source applied to the terminal VCC to provide drive current sufficient to drive transformer TR1, comprised of a pair of primary windings W1 and a pair of secondary windings W2, to generate a sine wave output. The pair of primary windings W1 and secondary windings W2 are coupled in parallel and the windings are arranged to provide a step-up transformer to magnify the input voltage preferably by ten to one (10:1), generating the desired output voltage which, in the present application, is a 20 Hz output of 90 volt amplitude with 15 mils of current from a nine volt (9V) DC, 150 mils current source. If desired, the frequency, amplitude and current of the circuit can be changed by selecting different component values for the passive elements. The component values chosen in the present invention have been selected to generate a signal which reproduces a standard bell ring signal employed in a conventional transmission between remote facsimile machines. The branch circuits BC1 and BC2 of the bridge circuit are alternately rendered conductive to alternately apply a positive voltage to opposing inputs of the input windings W1 for generating a sine wave from the positive-going pulses produced by timer circuit 16. The two input windings W1 are coupled in parallel as are the output windings W2.

The bell ring signal is selectively supplied through movable switch arm SW1-1 of the three-pole, double-throw switch SW1 described hereinabove.

The operation of the interface circuit of the present invention is as follows:

Assuming that the local facsimile is desired to be operated in combination with the PC and to function as a scanner, the switch SW2 is moved from the normal position, in which the movable switch arms are shown in solid line fashion, to the dotted line position simultaneously disconnecting the PC modem and the local facsimile from the telephone lines and directly connecting the PC receive line, PCR1 to ground and the PC transmit line PCT1 directly to stationary contact SW1-9. The local facsimile transmit line FXT2 is directly connected to ground and the facsimile receive line FXR2 is connected in common with line PCT1 to stationary contact SW1-9 of switch SW1. Switch SW3 may be either in the open or the closed position when switch SW2 is moved to the scan mode.

Switch SW1 is operated by pressing button B1 which is ganged to the movable switch arms SW1-1, SW1-4 and SW1-7 by a common linkage arm represented schematically by dotted line LA1. A biasing member or spring SWP1 normally biases the movable switch arms to the solid line position shown in Figure. By depressing switch button B1, the switch arms SW1-1, SW1-4 and SW1-7 are simultaneously moved to the dotted line positions shown in FIG. 1. Button B1 is maintained in the depressed position for a period preferably between one and two seconds. In the dotted line position, the nine volt (9V) DC source is coupled through switch arm SW1-4 and stationary terminal SW1-6 to the VCC terminals of ring generator circuit 14, producing a 20 Hz sine wave of 90 volt amplitude and a current of 15 mils at the secondary windings W2, which is applied to the PC line PCT1 through SW1-1, SW1-3, SW1-7, SW1-9, 126, SW2-6 and SW2-5, simulating what the PC believes is a request by a "remote" facsimile to transmit data thereto. The PC, which may be any type of computer (including but not limited to an Apple Macintosh, IBM PC, PCAT or PCXT) is provided with either an internal or external group III facsimile interface board, and

shifts to a receive mode for receiving what appears to the PC to be a facsimile transmission from a "remote" facsimile machine.

After holding the button B1 depressed for a time which need not exceed approximately two seconds, button B1 is released causing the nine volt (9V) DC source to be coupled to input **12***a* of current generator circuit **12**, which circuit applies the constant current to the facsimile receive line FXR2 to create what appears to the facsimile machine to be an off-hook condition. Simultaneously therewith, LED D3 lights indicating that the current generator circuit is presently in operation.

The local facsimile machine recognizes the constant current as representative of an off-hook condition preparing the local facsimile machine for transmission.

Thereafter, the conventional start button of the facsimile machine (not shown for purposes of simplicity) is pressed to start communication of the data scanned by the local facsimile machine from a document (or documents) placed within the facsimile machine document input (also not shown for purposes of simplicity).

The facsimile machine may be either a group I, group II, or group III machine, although optimum document resolution can be obtained through the use of a group III facsimile machine.

The conventional PC can store the transmitted data in its memory as a "picture" the resolution of the picture being 200 by 100 pixels for old facsimile machines, 200 by 200 pixels for standard facsimile machines and 400 by 400 pixels for new facsimile machines. Alternatively, a conventional OCR software package such as, for example, a CAERE OCR program available from Bitsoftware may be employed. Many alternative OCR software packages may be utilized to convert the "picture" transmitted by the facsimile machine to binary character form for word processing use or the like.

Operation of the facsimile machine in combination with the PC wherein the facsimile machine operates as a printer is as follows:

The ring generating circuit is not required to be operated in this mode and in applications where a facsimile machine is interfaced with a PC for use only as a printer, the ring generating circuit and the cooperating spring bias switch may be eliminated.

Switch SW2 shown in FIG. **1** is moved from the solid line to the dotted line position decoupling the PC and facsimile machine from the telephone lines and coupling the PC and facsimile machine together.

Switch SW1 is operated to power the current generator circuit **12** causing both the PC and the facsimile machine to see an off-hook condition.

The computer (PC) is operated either by providing a switch such as a push button switch (not shown for purposes of simplicity) to enter into a standard protocol with the facsimile machine and thereafter to transmit information in standard facsimile machine format. The facsimile machine senses that it is communicating with a remote facsimile machine and creates a document in accordance with the data received from the PC in "pixel" form. The PC may be provided with a standard program having a print mode in which the facsimile machine is identified in the printing routine as the specific output device being utilized during such a print mode. Upon completion of printing mode, switch SW2 may be returned to the solid line position decoupling the PC from the facsimile machine and recoupling the PC and facsimile modems to their associated telephone lines.

FIGS. **2***a*-**2***h* show various arrangements in which the present invention may be utilized.

Noting, for example, FIG. **2***a*, the circuitry **10** of the present invention is coupled between a standard facsimile machine **30**, a PC-type computer **40** having a facsimile modem circuitry **41** and central office telephone lines **50** and **51**. In the arrangement shown in FIG. **2***a*, the facsimile modem circuitry may be either internal or external to the PC-type computer **40**.

FIG. **2***b* shows another alternative embodiment in which the circuitry of the present invention is incorporated into the PC-type computer and may be arranged on its own printed wiring board or on a printed wiring board which is common to the circuitry **10** of the present invention and the facsimile modem circuitry **41**. The arrangement of FIG. **2***b* is otherwise the same as that shown in FIG. **2***a*. The circuit **10** shown in FIG. **2***b* is provided with three RJ-11 telephone cable connections for respective connection with the facsimile machine **30** and telephone lines **50** and **51**. If only one additional telephone cable is provided, the standard facsimile machine **40** and the internal facsimile modem **41** may share that cable.

FIG. **2***c* shows another alternative arrangement in which the circuitry **10** of the present invention is integrated into the standard facsimile machine **30**. The operation of the arrangement of FIG. **2***c* is otherwise similar to those shown in FIGS. **2***a* and **2***b*.

FIG. **2***d* shows an arrangement in which the circuitry **10** of the present invention is mounted upon its own printed wiring board and is arranged within the PC-type computer **40** and is electrically connected to the internal facsimile modem **41** by an external RJ-11 cable as shown. The operation is otherwise the same as the embodiments of FIGS. **2***a*-**2***c* described hereinabove.

The circuitry **10** of the present invention may alternatively be placed upon a printed circuit card of approximately a credit card size for insertion in a bus slot provided in present-day PCs enabling the circuit on the printed circuit card, inserted into a slot provided along the exterior of the PC, to be coupled to a PCMCIA bus which is an additional bus that may be addressed by the PC.

FIG. **2***e* shows still another arrangement in which the PC-type computer **40** is coupled to external facsimile modem circuitry **41**, for example, through an RS-232 cable. The facsimile machine interfaces to the external facsimile modem **41** through circuitry **10** by way of an RJ-11 telephone cable. When in the normal mode of operation, circuitry **10** interfaces central office telephone lines **50** and **51** through the RJ-11 telephone cables, as shown. Cable **50** may be employed for standard facsimile machine telephone communications while telephone line **51** is used for the external facsimile modem circuitry. If only one central office telephone line is available, line **50** may be shared in the manner previously described.

FIG. **2***f* shows an arrangement in which interface circuit **10** is internal to the facsimile machine. PC-type computer **40** is coupled to the facsimile modem circuitry **41** and interface circuit **10** through an RS-232 cable. When in the normal mode of operation, circuitry **10** interfaces the central office telephone lines **50** and **51** through RJ-11 telephone cables, as shown. Cable **50** may be employed for standard facsimile machine telephone communications while telephone line **51** is used for the external facsimile modem circuitry. If only one central office telephone line is available, line **50**, for example, may be shared in the manner previously described. The arrangement of FIG. **2***f* is used with PC's which do not have a fax modem installed. When interface **10** is installed internal to the facsimile, the fax modem of the fax machine incorporates many of the functions of circuit **10**, through integration of the already existing circuitry components of the fax modem.

The present invention may be employed with telephone systems having digital signal processing. FIG. **2***h*, which is similar to FIG. **2***f*, and which shows like circuits designated with like numerals, further includes an interface **60** for digital signal processing. The send and receive options required for scanning and printing are provided by interface **60**, which may, for example, be a chip set such as PEB 2091 N-V4.4 and EPB 2186 N-V4.4, manufactured by Siemens. Any other chip set having similar operating characteristics may be employed. As other digital signal formats come into use, such as ADSL (Asymmetric Digital Subscriber Line) HDSL (High-Bit Rate Digital Subscriber Line), or the like, a chip set for handling such formats may be substituted for interface **60**.

As shown in FIG. **2***i*, a RAM and/or Fixed Disk **70** may be incorporated into the interface **10**, integrated with a fax modem **30** to allow for the capture of images or documents for later transfer into the PC **40** or the facsimile machine **30**, or for image enhancement within the interface configuration **10**. The addition of the data storage feature is particularly desirable for the fax machine or fax modem when they are in normal fax send or receive modes.

Optionally, the data storage feature is desirable for field application usage where information may be downloaded from a PC and stored in interface **10** for later transfer to a facsimile machine or a PC. Storage would be retained in this instance by battery backup incorporated in the RAM memory **70**. Battery backup is not necessary for fixed disk storage.

FIG. **2***j* shows an arrangement for automated scanning and printing functions between a fax modem and a fax machine.

As represented in FIGS. **2***a*-**2***f*, in order to activate an automated process for scanning or printing, the ring circuit **4** (FIG. **1**) interfaces with the Tip and Ring features of the fax modem or fax machine. This is dependent on keying in a code on the fax keypad, such as ## or #* or any other predetermined code in order to respectively identify the scanning and printing functions. Interface **10** detects the tones generated by the inserted code (at the tone receiver **25** and generates a ring signal. The ring signal is detected and interpreted by the ring detect circuit of the fax modem or the fax machine. The fax modem or fax machine then generates receive signals or tones which indicate a connection. The fax modem or fax machine commences the scanning of the fax image or print cycle.

By depressing a predetermined code such as ## on the fax machine key pad, the tone detector circuit **25** interprets this code, enabling a control circuit to activate first (**26**) and second (**27**) relay means. Relay **26** disconnects the fax machine and the fax modem (connected to the PC) from the Central Office terminal lines. Relay **27**, then connects 9V to the ring generator circuit **14** causing a sinusoidal ring signal of a predetermined frequency and amplitude to be generated to the PC fax modem. The PC fax modem answers and starts the scanning process from the fax machine to the PC.

A communication program stored in the PC allows the code #* (for example) to be entered, generating the tone signal from the fax modem. The tone detector circuit in the interface **10** interprets this code, enabling a control circuit to activate first (**26**) and second (**27**) relay means. Relay **26** disconnects the fax machine and the fax modem (connected to the PC) from the Central Office terminal lines. Relay **27**, then connects 9V to the ring-generator circuit **14** causing a sinusoidal ring signal of a predetermined frequency and amplitude to be generated to the fax machine. The fax machine answers and starts the printing process from the PC fax modem.

The switch version does not require the ## or #* or any other code, but activates the automated scanning/printing by pressing the ringer button B2.

The provision of the scan and print functions internal to the facsimile machine may also be accomplished by utilizing the analog output of the optical scanning circuit **75** of the facsimile machine (FIG. **2***g*). The analog signals are processed by the control/modem circuitry **76** where they are converted into a digital serial signal and then transmitted through the RS 232 sending interconnect port, the signal is then received by an RS232 connector at the PC. The aforementioned procedure utilizes unused signal lines which are available on most modem chips such as the Rockwell chip series.

A send and receive driver software package then implements the following action. The receive driver software accepts the digital image for storage or processing as appropriate. This send/receive driver communications software package also has the ability to send a digital image to the facsimile machine for printing purposes. The facsimile machine's control/modem circuitry **6** and then processed by the print driver **77** for printing. This linkage method for scanning and printing utilizing a fax machine is particularly useful for a computer without a fax modem. Any available send/receive communications software package is acceptable.

The commands of ## or #* for sending and receiving are still appropriate for this application although any other desired commands may be selected.

For the automated operation, the circuitry **10** of FIG. **1** is provided with device **25** which includes an automatic tone detector circuit for receiving a unique number dialed by either the facsimile machine or the PC modem. Upon recognition of the unique number, as set forth above or by generation using other techniques, the tone receiver operates a driver circuit **26** for operating switch SW2 to decouple the PC and the facsimile machine from their associated telephone lines and for connecting the PC to the facsimile machine. Driver circuit **26** may be a relay or its equivalent for operating an armature (not shown) to move the switch arms between their two operating states. Driver unit **27** which likewise may be a relay or its equivalent, operates the switch SW1 to the position energizing the ringing circuit **14**. A timer is set and when two seconds elapses, unit **27** is deenergized causing the off-hook signal to be generated by current generator circuit **12** through the release of the operating button. When printing or scanning is complete, the tone receiver unit is reset. A simplified flow diagram of the aforementioned operation is shown in FIG. **1***a*.

The circuitry of the present invention is highly simplified in design and provides effective communication between the PC and local facsimile machine enabling the local facsimile machine to provide the dual functions of operating independently for transmission or reception to remote facsimile machines as well as functioning as a scanner or printer with a local PC. The circuitry of the present invention provides all the necessary signal conditions which lead the PC and local facsimile machine to believe that they are communicating with one another over a telephone line. The facsimile machine, although operating in its normal fashion, functions very effectively as a scanner or printer as and when needed and provides a scanning or printing capability at a mere fraction of the cost of conventional scanners or printers.

Simple switching of SW2 returns the PC and facsimile machine to normal use.

The novel ring circuit provides the required ring signal which is conventional in present-day facsimile transmission application through the employment of an inexpensive, low voltage, DC battery or 9V power source and, through the operation of two switches incorporated in the novel interface circuitry of the present invention, followed by operation of the facsimile start switch, provides an interface circuit which

is extremely easy to use and which eliminates the need for more complicated and expensive microprocessor-based devices.

A latitude of modification, change and substitution is intended in the foregoing disclosure, and in some instances, some features of the invention will be employed without a corresponding use of other features. Accordingly, it is appropriate that the appended claims be construed broadly and in a manner consistent with the spirit and scope of the invention herein described.

What is claimed is:

1. A Method of using a facsimile machine to facilitate a transfer for digital image scan data or digital image print data between the facsimile machine and the computer, the method comprising:

establishing a communication path between the facsimile machine and the computer using a bidirectional passive link; and

activating the transfer in a first mode to send the digital image scan data from the facsimile machine directly to the computer, or activating the transfer in a second mode to receive digital image print data directly from the computer, the digital image scan data and the digital image print data being communicated over the bi-directional passive link, and the activating being initiated using communications software on the computer; and

in the first mode, storing the digital scan data in a computer readable medium, for use as needed, and in the second mode, printing the digital image print data using a facsimile machine printer device.

2. The Method of claim 1 further including, using a facsimile machine controller to facilitate the transfer of digital image scan data or digital image print data between the facsimile machine and the computer by:

activating a controller board in the first mode to send the digital image scan data from the facsimile machine directly to the computer or activating a controller board in the second mode to enable the facsimile machine to receive digital image print data directly from the computer.

3. The method of claim 1, including transferring a parallel data source signal of a scanned image from said facsimile machine to said computer.

4. The method of claim 1, including transferring a digital serial data source signal of a scanned image from said facsimile machine to said computer.

5. The method of claim 1, including transferring scan or print image data via analog, serial or parallel transmission between said facsimile machine and said computer.

6. The method of claim 1 further comprising optically recognizing the scanned data within the computer and converting the scanned data into character codes within the computer, said computer being equipped with Optical Character Recognition Software.

7. A method of using a facsimile machine comprising:

inputting a document image;

activating the optical scanner operatively connected to said document image input of said facsimile machine configured to generate digital image data as the document image is scanned;

activating a printer operatively connected to print a document in response to receiving digital image data; and

activating a switch providing a connection to a port enabling a direct transfer of digital image scan or print data via a passive link bi-directional direct connection between the facsimile machine and the computer;

whereby, said computer being equipped with send receive driver communications software enables the transfer of digital image data between the facsimile machine and the computer through the bi-directional direct connection via the passive link.

8. A method of using a fax machine to transfer digital image data signals via a bi-directional passive link with a computer, for scanning or printing:

enabling said scan or print digital image data to transfer between said facsimile machine and computer via a passive link bi-directional direct connection;

said computer being equipped with send or receive communications software, such that when activated,

scanned document digital image data from the facsimile machine transfers directly to the computer, where it may be stored for use as needed; or

digital image data sent from the computer to the facsimile machine, is printed out, or stored for use as needed.

* * * * *

EXHIBIT D

US008294915B2

(12) **United States Patent**
Nachman

(10) **Patent No.: US 8,294,915 B2**
(45) **Date of Patent: Oct. 23, 2012**

(54) **INTERFACE CIRCUIT FOR UTILIZING A FACSIMILE MACHINE COUPLED TO A PC AS A SCANNER OR PRINTER**

(75) Inventor: **Bruce G. Nachman**, Villanova, PA (US); **Marvin J. Nachman**, legal representative, Villanova, PA (US)

(73) Assignee: **Infinity Computer Products Inc**, Villanova, PA (US)

(*) Notice: Subject to any disclaimer, the term of this patent is extended or adjusted under 35 U.S.C. 154(b) by 0 days.

(21) Appl. No.: **13/317,310**

(22) Filed: **Oct. 14, 2011**

(65) **Prior Publication Data**

US 2012/0127503 A1 May 24, 2012

Related U.S. Application Data

(60) Continuation of application No. 12/322,908, filed on Feb. 9, 2009, now Pat. No. 8,040,574, which is a continuation of application No. 11/084,297, filed on Mar. 19, 2005, now Pat. No. 7,489,423, which is a division of application No. 08/669,056, filed on Jun. 24, 1996, now Pat. No. 6,894,811, which is a continuation-in-part of application No. 08/226,278, filed on Apr. 11, 1994, now Pat. No. 5,530,558.

(51) **Int. Cl.**

G06F 3/12	(2006.01)
H04N 1/32	(2006.01)
H04N 1/04	(2006.01)

(52) **U.S. Cl.** **358/1.13**; 358/1.15; 358/442; 358/468; 358/474; 358/296; 379/100.01

(58) **Field of Classification Search** 358/1.13, 358/1.15, 442, 468, 296, 440, 434–437, 474; 379/100.01, 100.02, 100.06, 100.05, 100.13
See application file for complete search history.

(56) **References Cited**

U.S. PATENT DOCUMENTS

4,802,204	A *	1/1989	Chang	379/100.15
5,218,458	A *	6/1993	Kochis et al.	358/448
5,390,031	A *	2/1995	Kang et al.	358/468
5,452,106	A *	9/1995	Perkins	358/468
5,608,546	A *	3/1997	Nakamura et al.	358/468
6,134,017	A *	10/2000	Schlank et al.	358/1.15

FOREIGN PATENT DOCUMENTS

DE 4312136 A1 * 10/1994

* cited by examiner

Primary Examiner — Cheukfan Lee
(74) *Attorney, Agent, or Firm* — Marvin J. Nachman

(57) **ABSTRACT**

Printing and scanning methods using a facsimile machine communicating with a computer over a bi-directional direct passive link connected between digital communication ports of the computer and facsimile machine Upon receipt of an instruction at the facsimile machine, the printing method includes receiving digital image data from the computer via the bi-directional direct passive link. The digital image data is processed substantially as it is received at the facsimile machine and printed onto media. Upon receipt of an instruction at the facsimile machine, the scanning method includes scanning content from media provided within the facsimile machine to create digital image data digital image data representative of the content, and providing the digital image data substantially as it is created to the computer via the bi-directional direct passive link. The instructions and digital image data are transmitted in a standard facsimile machine format using standard facsimile machine protocols.

15 Claims, 12 Drawing Sheets

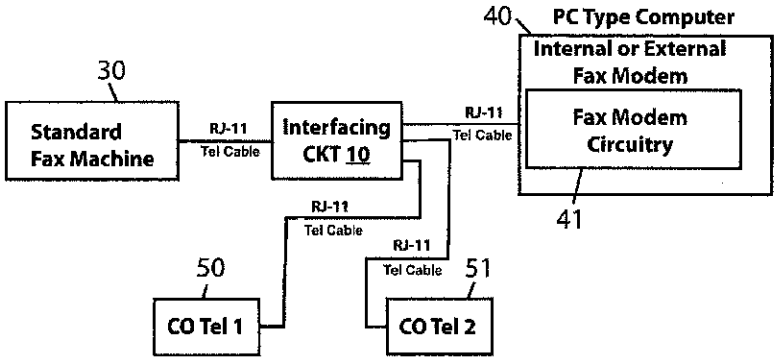

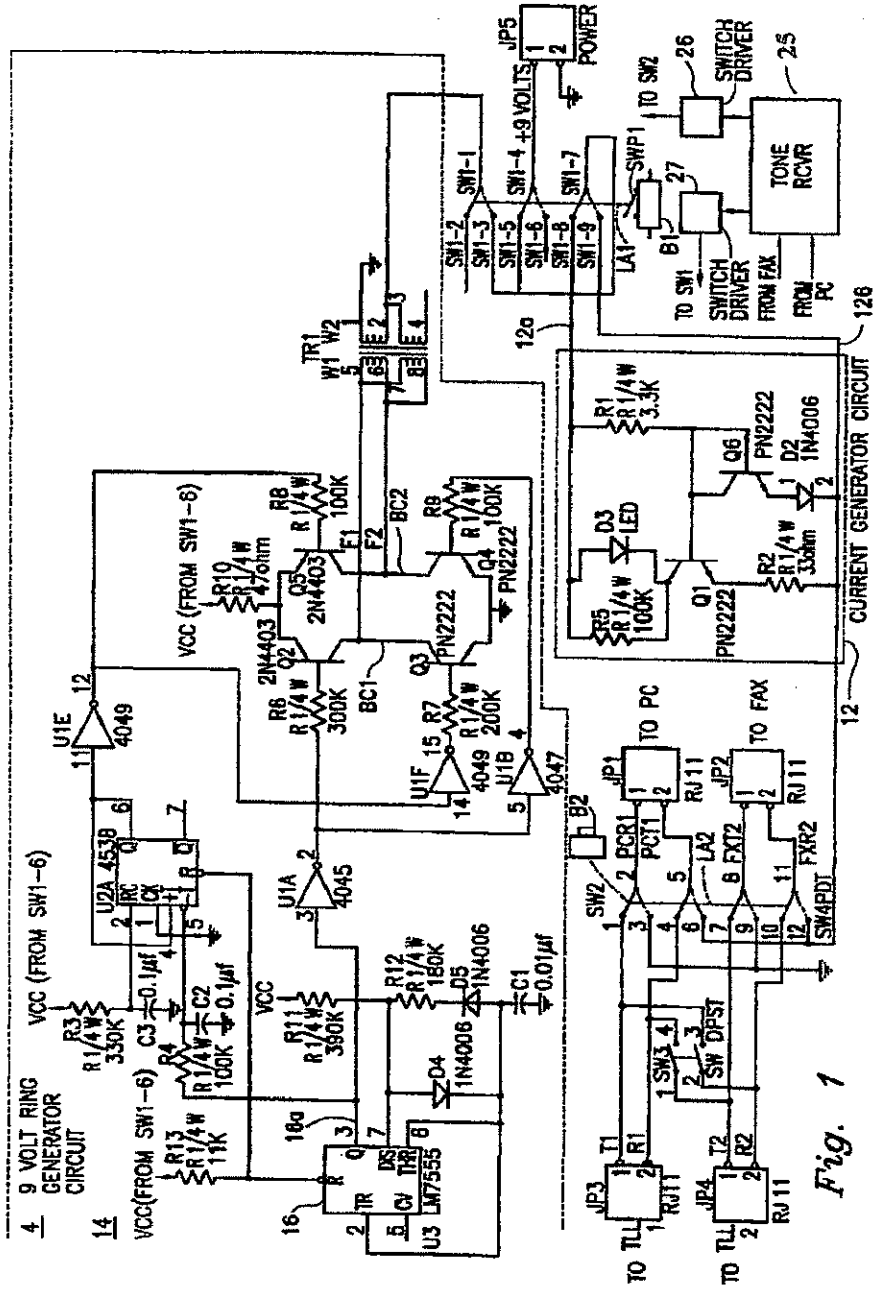
4 9 VOLT RING GENERATOR CIRCUIT
14
VCC(FROM SW1-6)
VCC (FROM SW1-6)
VCC
U1E 4049
U2A 4538
U1A 4045
U1F 4049
U1B 4047
U3 LM7555
TR1
W1 W2
BC1
BC2
Q1 PN2222
Q2 2N4403
Q3 PN2222
Q4 PN2222
Q5 2N4403
Q6 PN2222
D2 1N4006
D3 LED
D4 1N4006
D5 1N4006
C1 0.01µf
C2 0.1µf
C3 0.1µf
R1 R1/4W 3.3K
R2 R1/4W 330ohm
R3 R1/4W 330K
R4 R1/4W 100K
R5 R1/4W 100K
R6 R1/4W 300K
R7 R1/4W 200K
R8 R1/4W 100K
R9 R1/4W 100K
R10 R1/4W 470ohm
R11 R1/4W 390K
R12 R1/4W 180K
R13 R1/4W 11K
JP5 POWER
+9 VOLTS
SW1-1
SW1-2
SW1-3
SW1-4
SW1-5
SW1-6
SW1-7
SW1-8
SW1-9
SWP1
LA1
B1
B2
TO SW2
SWITCH DRIVER
TONE RCVR
TO SW1
FROM FAX
FROM PC
12a
12b
12
CURRENT GENERATOR CIRCUIT
TO PC
TO FAX
JP1 RJ11
JP2 RJ11
JP3 RJ11
JP4 RJ11
PCR1
PCT1
FXT2
FXR2
LA2
SW2
SW3
SW4PDT
SW DPST
TO TLL
T1
R1
T2
R2

Fig. 1

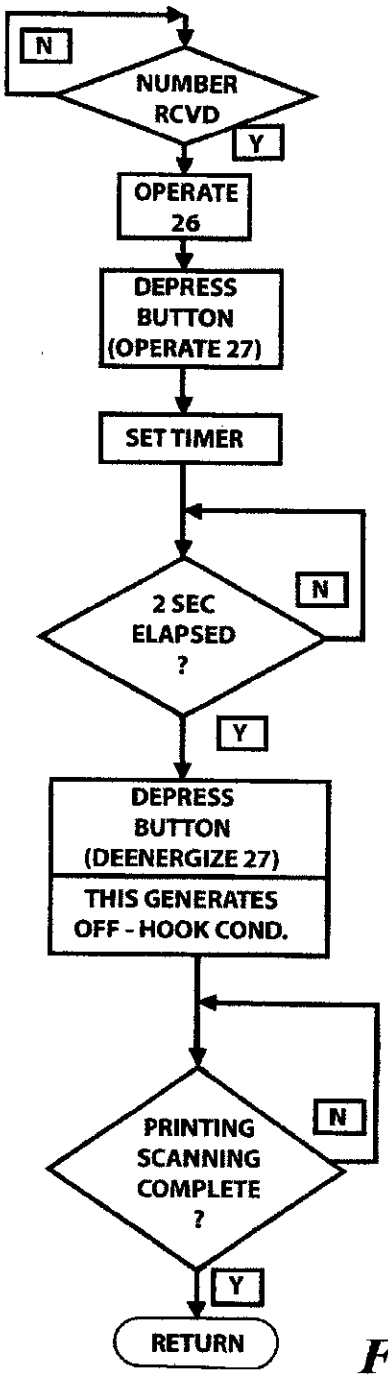
N
NUMBER RCVD
Y
OPERATE 26
DEPRESS BUTTON (OPERATE 27)
SET TIMER
2 SEC ELAPSED ?
N
Y
DEPRESS BUTTON (DEENERGIZE 27)
THIS GENERATES OFF - HOOK COND.
PRINTING SCANNING COMPLETE ?
N
Y
RETURN

Fig. 1a

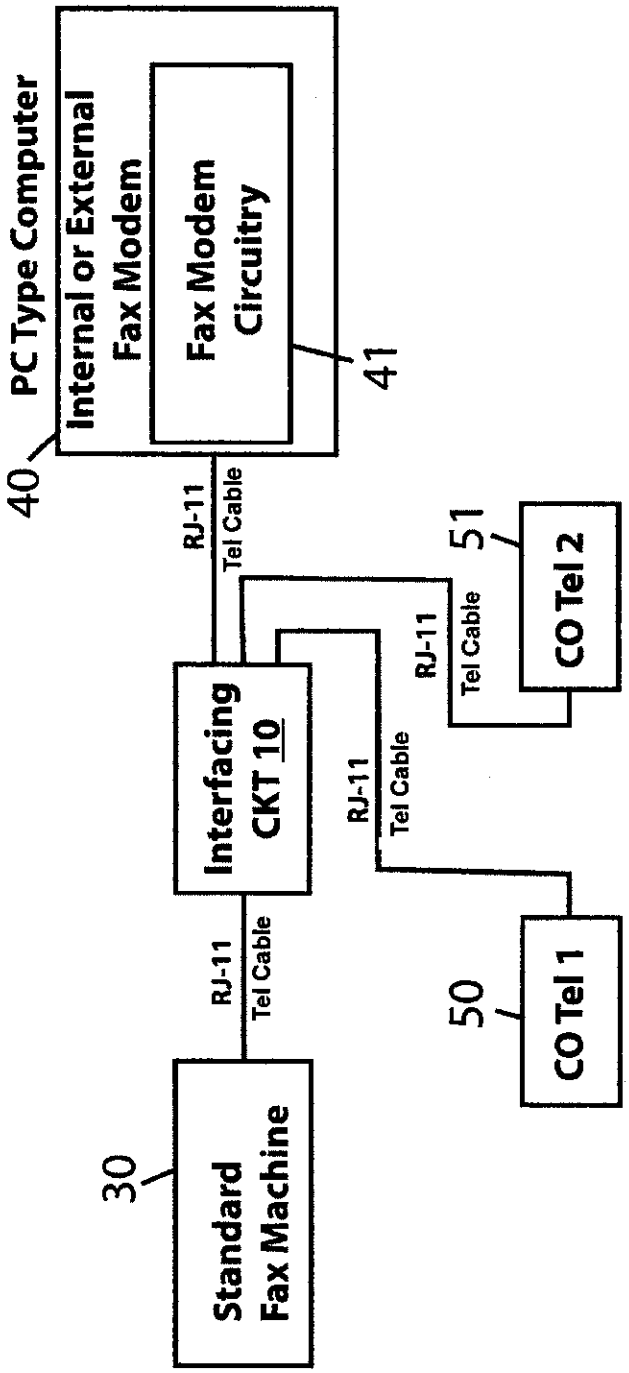
PC Type Computer
Internal or External Fax Modem
Fax Modem Circuitry
40
41
RJ-11
Tel Cable
Interfacing CKT 10
RJ-11
Tel Cable
RJ-11
Tel Cable
51
CO Tel 2
RJ-11
Tel Cable
50
CO Tel 1
30
Standard Fax Machine

Fig. 2a

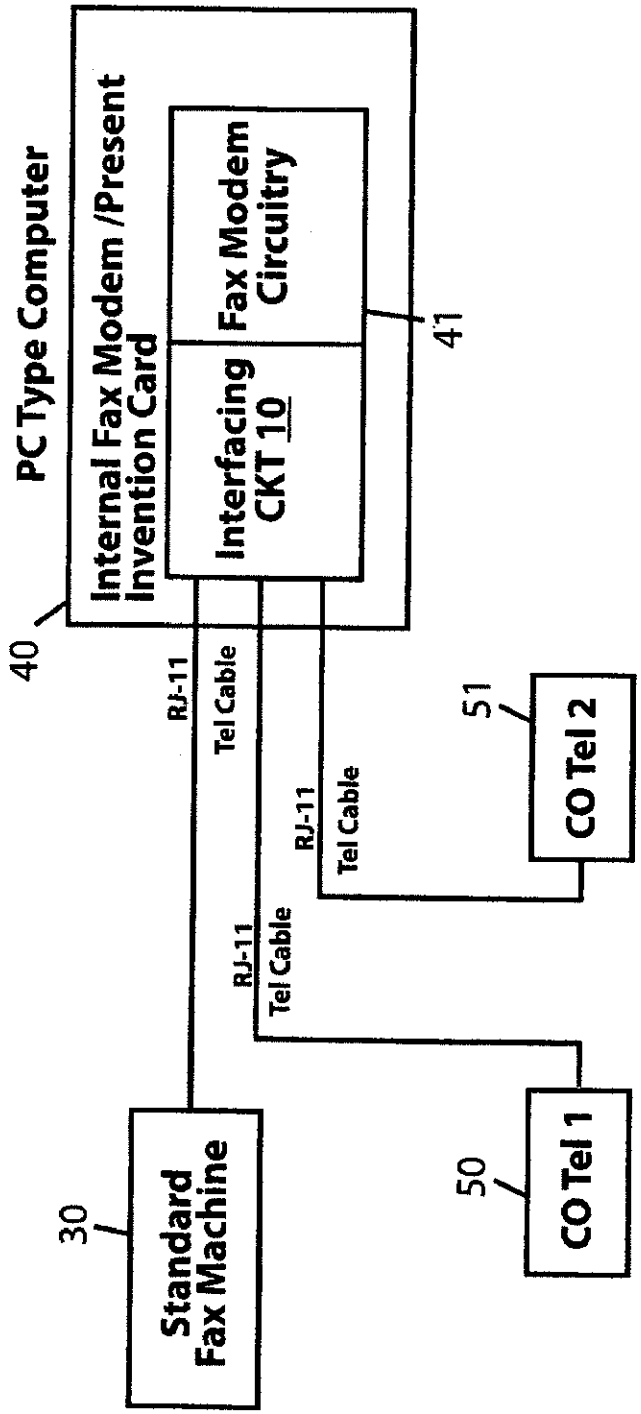
PC Type Computer
Internal Fax Modem /Present Invention Card
Interfacing CKT 10
Fax Modem Circuitry
41
40
RJ-11
Tel Cable
RJ-11
Tel Cable
RJ-11
Tel Cable
51
CO Tel 2
50
CO Tel 1
30
Standard Fax Machine

Fig. 2b

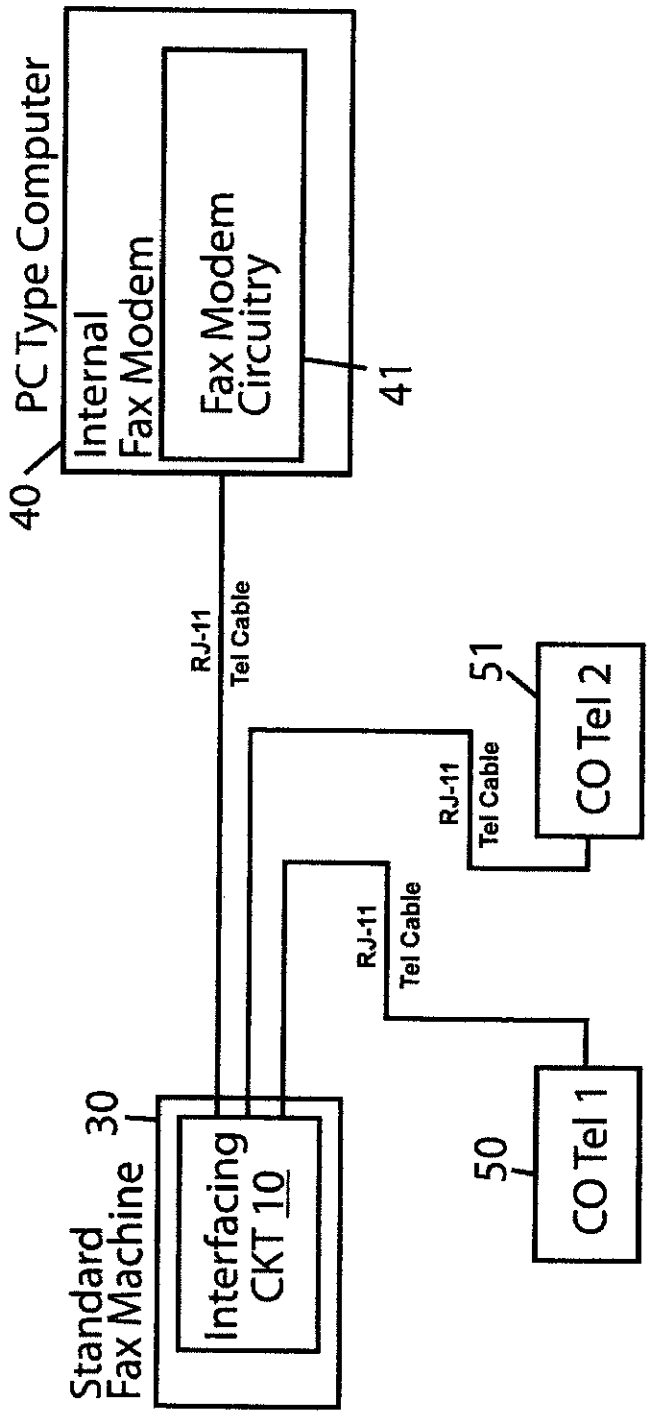
PC Type Computer
Internal Fax Modem
Fax Modem Circuitry
40
41
RJ-11
Tel Cable
Standard Fax Machine
Interfacing CKT 10
30
RJ-11
Tel Cable
RJ-11
Tel Cable
CO Tel 1
50
CO Tel 2
51

Fig. 2c

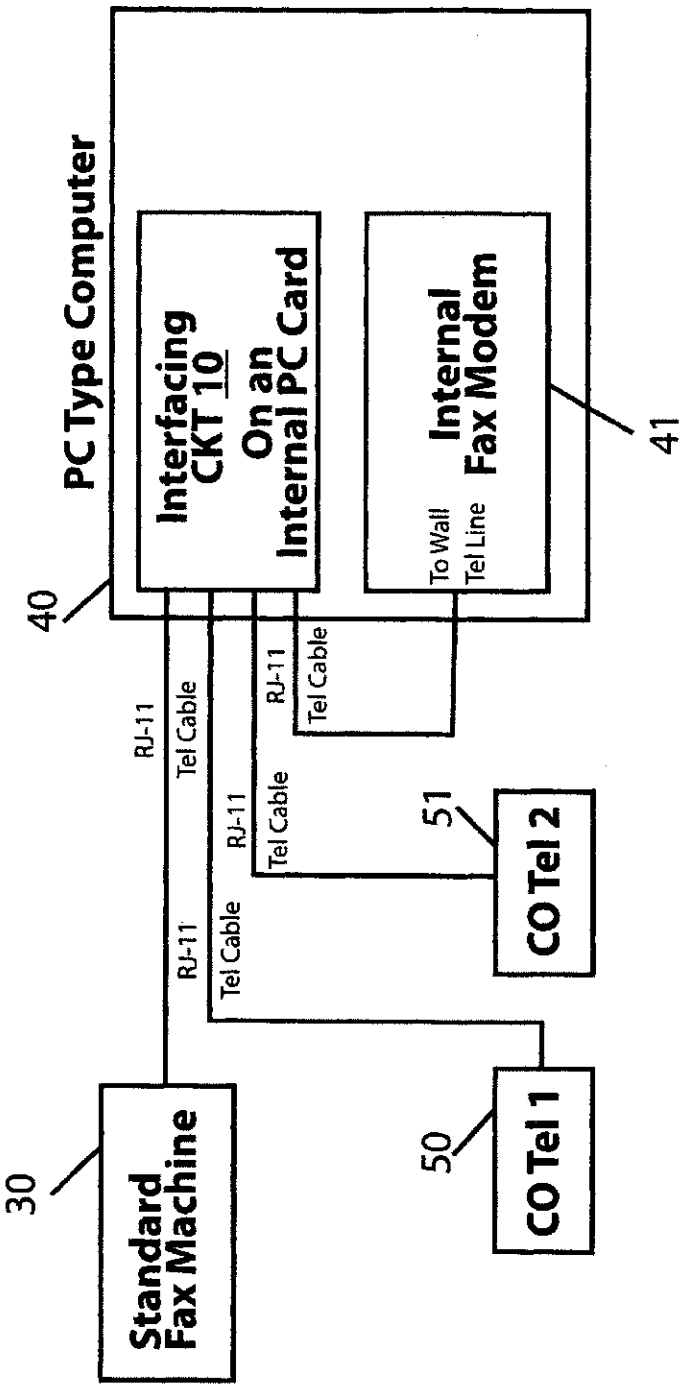
PC Type Computer
Interfacing CKT 10 On an Internal PC Card
Internal Fax Modem
To Wall
Tel Line
40
41
RJ-11
Tel Cable
RJ-11
Tel Cable
RJ-11
Tel Cable
RJ-11
Tel Cable
51
CO Tel 2
50
CO Tel 1
30
Standard Fax Machine

Fig. 2d

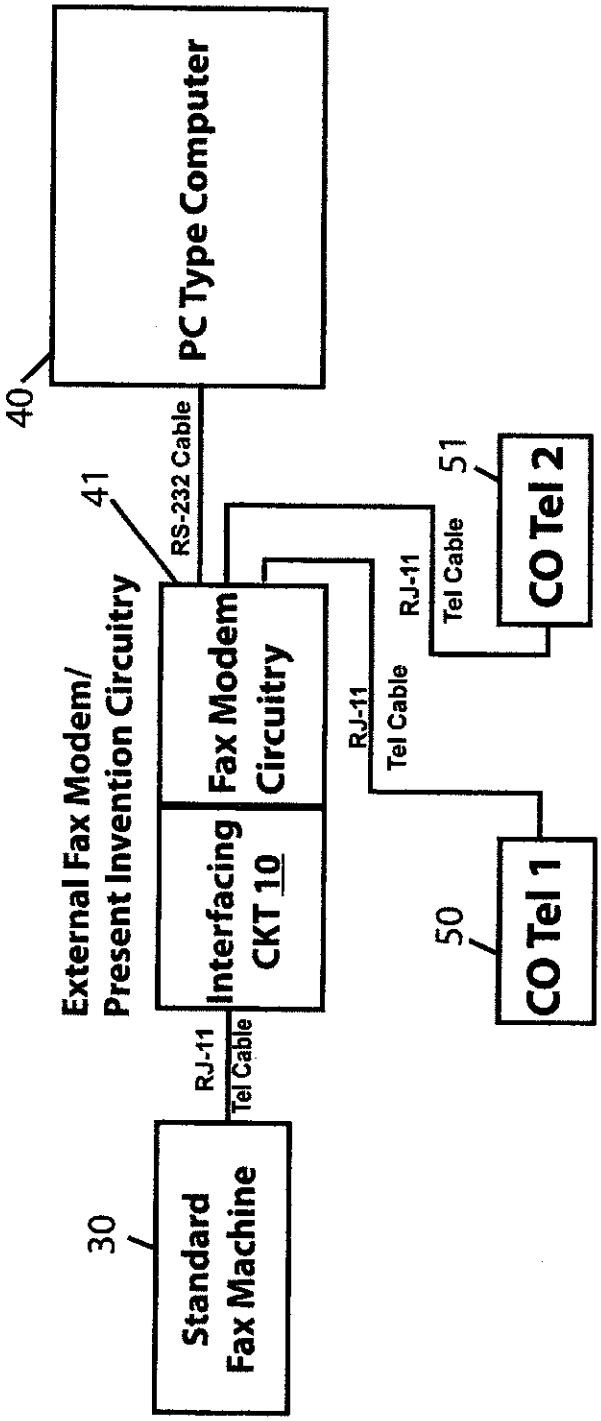
PC Type Computer
40
RS-232 Cable
41
External Fax Modem/
Present Invention Circuitry
Fax Modem
Circuitry
Interfacing
CKT 10
RJ-11
Tel Cable
RJ-11
Tel Cable
51
CO Tel 2
50
CO Tel 1
RJ-11
Tel Cable
30
Standard
Fax Machine

Fig. 2e

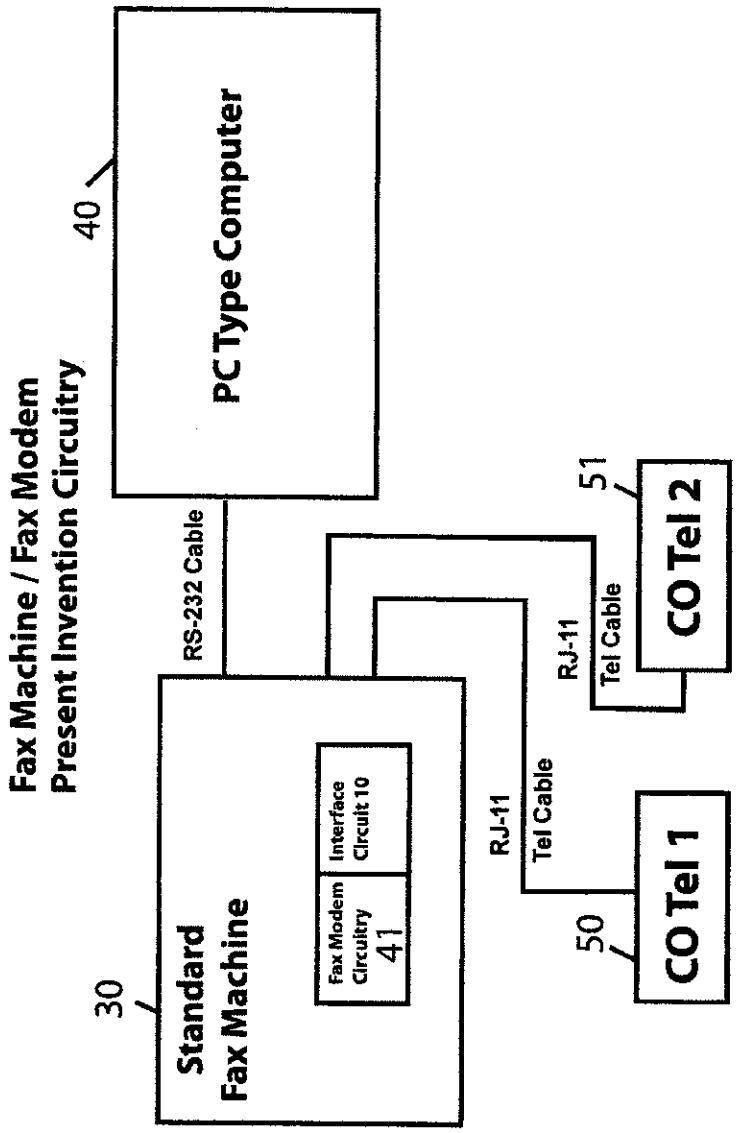
Fax Machine / Fax Modem
Present Invention Circuitry
40
PC Type Computer
RS-232 Cable
30
Standard
Fax Machine
Fax Modem
Circuitry
41
Interface
Circuit 10
RJ-11
Tel Cable
RJ-11
Tel Cable
50
CO Tel 1
51
CO Tel 2

Fig. 2f

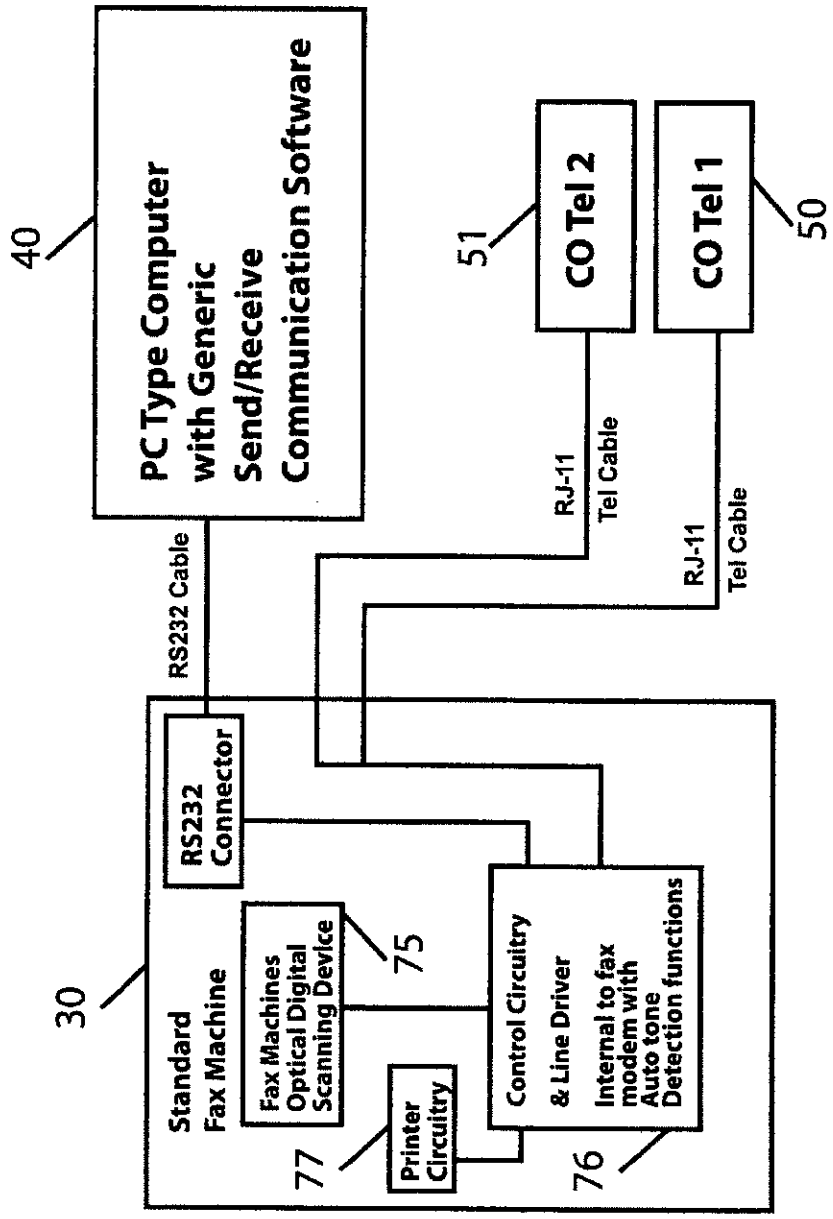
40
PC Type Computer with Generic Send/Receive Communication Software
RS232 Cable
30
Standard Fax Machine
RS232 Connector
Fax Machines Optical Digital Scanning Device
75
77
Printer Circuitry
Control Circuitry
& Line Driver
Internal to fax modem with Auto tone Detection functions
76
RJ-11
Tel Cable
RJ-11
Tel Cable
51
CO Tel 2
CO Tel 1
50

Fig. 2g

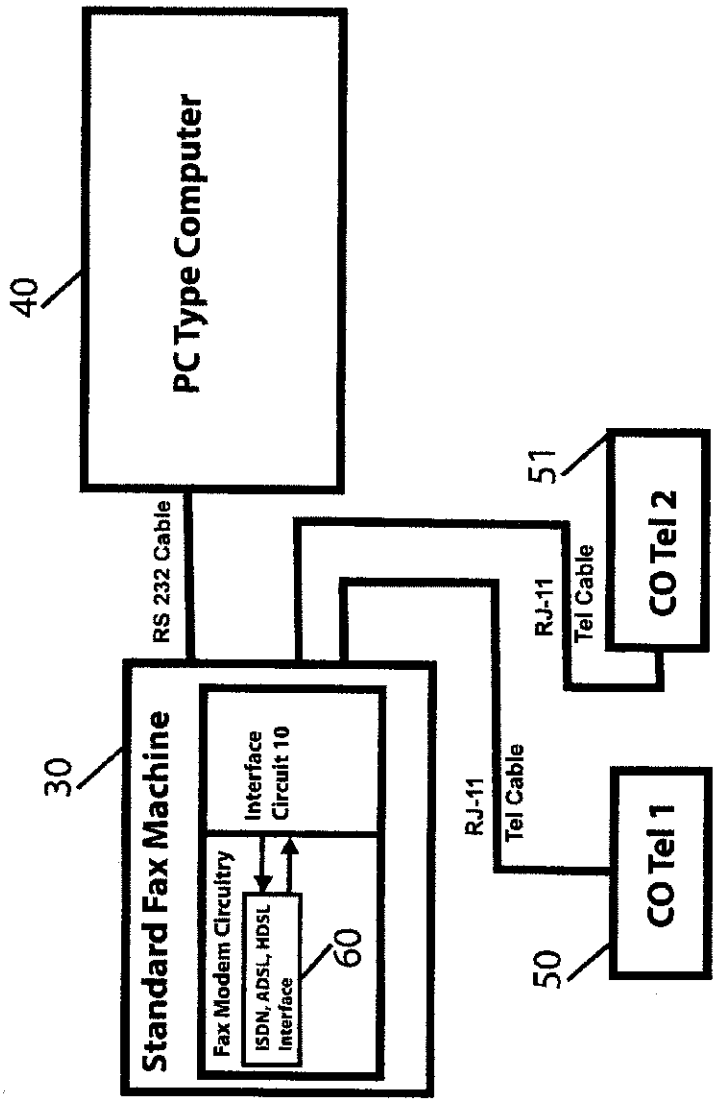
40
PC Type Computer
RS 232 Cable
30
Standard Fax Machine
Fax Modem Circuitry
ISDN, ADSL, HDSL Interface
60
Interface Circuit 10
RJ-11
Tel Cable
50
CO Tel 1
RJ-11
Tel Cable
51
CO Tel 2

Fig. 2h

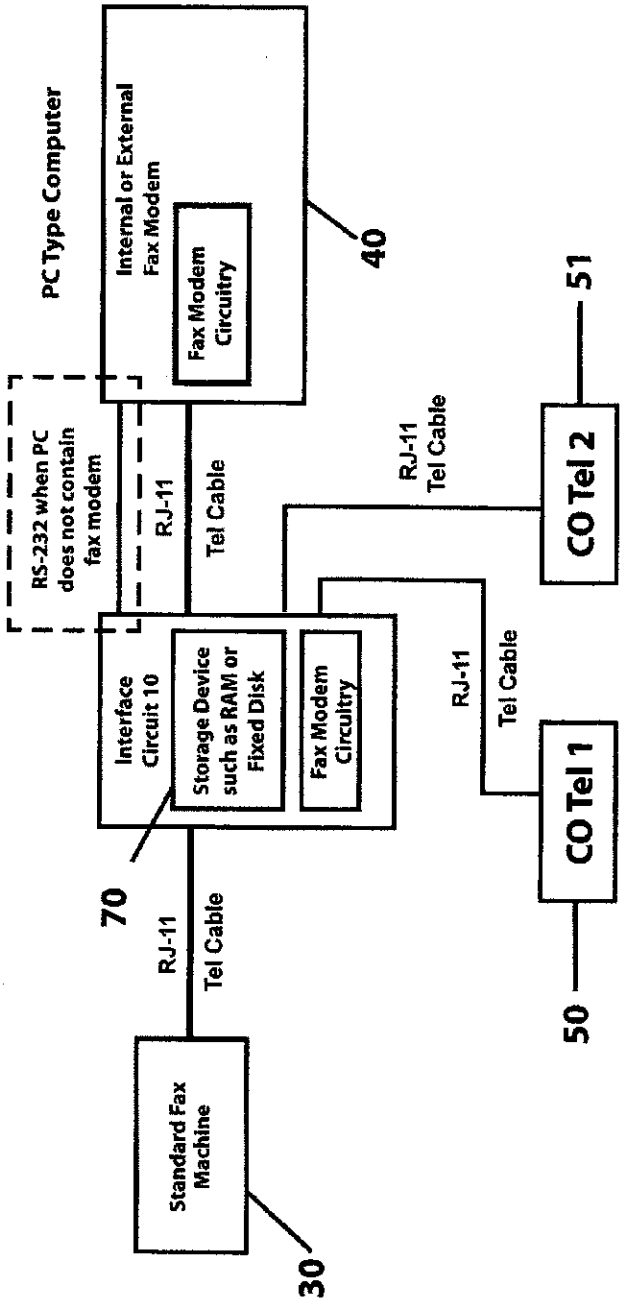
PC Type Computer
Internal or External Fax Modem
Fax Modem Circuitry
40
RS-232 when PC does not contain fax modem
RJ-11
Tel Cable
Interface Circuit 10
Storage Device such as RAM or Fixed Disk
Fax Modem Circuitry
70
RJ-11
Tel Cable
Standard Fax Machine
30
RJ-11
Tel Cable
CO Tel 2
51
RJ-11
Tel Cable
CO Tel 1
50

Fig. 2i

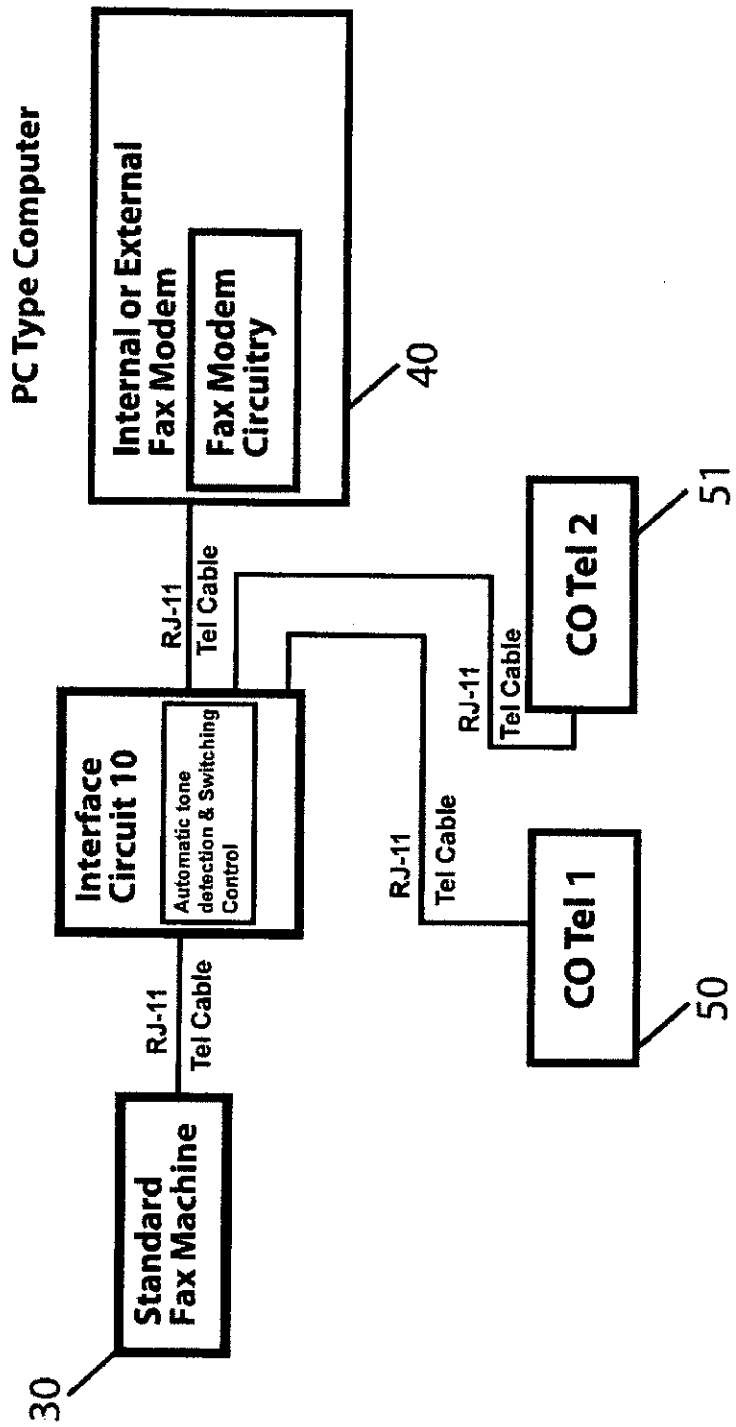
PC Type Computer
Internal or External Fax Modem
Fax Modem Circuitry
40
RJ-11
Tel Cable
Interface Circuit 10
Automatic tone detection & Switching Control
RJ-11
Tel Cable
Standard Fax Machine
30
RJ-11
Tel Cable
CO Tel 1
50
RJ-11
Tel Cable
CO Tel 2
51

Fig. 2j

INTERFACE CIRCUIT FOR UTILIZING A FACSIMILE MACHINE COUPLED TO A PC AS A SCANNER OR PRINTER

CROSS-REFERENCE TO RELATED APPLICATIONS

This application is a continuation of U.S. patent application Ser. No. 12/322,908, filed Feb. 9, 2009, now U.S. Pat. No. 8,040,574, which is a continuation of U.S. patent application Ser. No. 11/084,297, filed Mar. 19, 2005, now U.S. Pat. No. 7,489,423, which is a divisional of U.S. Pat. No. 08/669,056, filed Jun. 24, 1996, now U.S. Pat. No. 6,894,811, which is a continuation-in-part of U.S. patent application Ser. No. 08/226,278, filed Apr. 11, 1994, now U.S. Pat. No. 5,530,558. These applications are incorporated herein by reference.

FIELD OF THE INVENTION

The present invention relates to interfacing a facsimile with a PC and more particularly to an interface circuit of highly simplified design and including a novel ringing circuit capable of generating a sine wave of a given amplitude and frequency from a small, portable DC battery or 9V DC power supply.

BACKGROUND OF THE INVENTION

As is well known in the art, a conventional facsimile scans documents and transmits the scanned information through a modem in a standard facsimile format to a remote facsimile which receives the transmitted data by a modem and converts the transmitted data into a form for printing a document which is a replica of the document scanned by the transmitting facsimile.

Scanning and printing devices especially adapted for use with PCs (i.e. personal computers) are relatively expensive devices typically costing many hundreds of dollars to as much as several thousands of dollars for applications requiring character recognition capabilities.

It has been recognized that conventional facsimile machines may be utilized as scanners or printers for PCs. However, the interface devices presently available are both complicated and expensive and typically require a microprocessor which further tends to increase both cost and circuit complexity.

OBJECT OF THE INVENTION

It is, therefore, a principal object of the present invention to provide a circuit for interfacing a PC and a facsimile to enable the facsimile to be utilized as a scanner or a printer for a PC and to accomplish all of the objectives of a scanner or a printer in a simple straightforward manner through the use of a circuit of highly simplified design and low cost.

BRIEF DESCRIPTION OF THE INVENTION

The present invention achieves all of the above as well as other objectives through apparatus which is characterized by comprising first switch means capable of selectively coupling a PC modem and a facsimile modem to independent telephone lines when in a non-scanning/printing mode and for decoupling the PC and facsimile modems from the telephone lines and coupling these modems to one another when placed in a scanning/printing mode.

Second manually operable switch means activates a novel ringing circuit which generates a sine wave of appropriate amplitude and frequency and applies this ringing circuit to the PC modem, when used as a scanner or to the facsimile when being used as a printer, causing the PC or facsimile machine to respond to the simulated transmit request.

Release of the circuitry operating button causes the interface circuitry to apply an off-hook condition to the facsimile. Document scanning or printing is initiated by pressing the facsimile start button or the start button provided as part of the PC or by a program step integrated into the PC as part of a print mode (selecting the facsimile as the output device for printing). Transmitted data may be directly stored in a PC memory. Documents incorporating alphanumeric data may be converted by a software program incorporated into the PC.

The ring generating circuit responsive to pressing of the operating button generates a transmit request signal by converting the low voltage from a DC source into a 20 cycle sine wave of 90 volt amplitude through the employment of a pulse generating circuit coupled to phase delay means and applying phase delayed and undelayed pulses to a transistorized switching circuit for selectively applying positive DC voltage to opposing inputs of a step-up transformer which applies a boosted sinusoidal ring signal to the PC modem, the ring generating circuit generating a ringing signal of the appropriate amplitude and frequency in a highly simplified and inexpensive manner. Since operation of the ringing circuit is completed in less than two seconds, a battery, if used, will have an extremely long operating life. Alternatively, if a 9V DC power source is used the battery is not required at all.

The simple, straightforward operation of only three switches eliminates the need for complicated, expensive and typically microprocessor-based circuitry.

BRIEF DESCRIPTION OF THE FIGURES

The above, as well as other objects of the present invention, will become apparent upon reading the accompanying description and drawings in which:

FIG. **1** is a circuit diagram of the interface circuitry of the present invention which enables a PC to utilize a conventional facsimile as a sophisticated scanner or printer.

FIG. **1***a* is a flow diagram of the circuitry of FIG. **1** employing the microprocessor-based tone detecting circuit of FIG. **1**.

FIGS. **2***a*-**2***j* show simplified block diagrams of various system arrangements employing the circuitry of the present invention.

DETAILED DESCRIPTION OF THE INVENTION AND PREFERRED EMBODIMENTS THEREOF

FIG. **1** shows an interface circuit **10** embodying the principles of the present invention and being comprised of a switch assembly SW2 which is a four-pole double-throw switch having four movable switch arms SW**2-2**, SW**2-5**, SW**2-8**, and SW**2-11**, each cooperating with a pair of stationary contacts, as shown. For example, and for simplicity, note that switch arms SW**2-2** is switchable between stationary contacts SW**2-1** and SW**2-3**.

Movable switch arms SW2-2, SW**2-5**, SW**2-8** and SW**2-11** are all ganged to operate in unison as shown by common operating button B2 coupled to the switch arms through a linkage arm LA2 shown in schematic fashion as a dotted line. The switch is designed so that the switch arms are retained in the positions to which they are moved.

The switch arms are arranged in pairs, switch arms SW**2-2** and SW**2-5** selectively coupling a modem of a PC (not shown

for purposes of simplicity) to either a first telephone line #1 through jumper JP3 or directly to a local facsimile machine (not shown for purposes of simplicity) through a jumper terminal JP2.

In a similar fashion, a pair of switch arms SW2-8 and SW2-11 selectively couple the local facsimile machine through jumper JP2 to either a separate telephone line #2 (through jumper JP4) or to the modem of the PC.

A double-pole single-throw switch SW3 is provided to couple either the local facsimile machine or the PC modem to a single telephone line or alternatively, disconnects the PC modem and facsimile machine from the common telephone line. For example, in applications where both the local facsimile and the PC each have an independent, dedicated telephone line, switch SW3 remains open. In applications where only a single telephone line is provided, both PC and the local facsimile may share the single telephone line by gaining access thereto in a staggered manner.

Switch SW1 which is a three-pole, double-throw switch, comprises three movable switch arms SW1-1, SW1-4 and SW1-7, each movable switch arm cooperating with a pair of stationary switch arms.

Movable switch arm SW1-1 selectively couples the output terminal of the pair of secondary windings W2 of a step-up transformer TR1 either to stationary terminal SW1-2, which isolates the output of the transformer TR1 from the operating circuitry, or stationary contact SW1-3 which couples the secondary winding W2 of transformer TR1 through movable switch arm SW1-7 and stationary contact SW1-9 simultaneously to stationary contacts SW2-6 and SW2-12 of four-pole double-throw switch SW2 for simultaneous connection to the PC modem and the local facsimile, when switch arms SW2-5 and SW2-11 respectively engage stationary contacts SW2-6 and SW2-12.

Movable switch arm SW1-4 selectively couples a small nine volt (9V) DC source (through jumper 15) to either stationary switch arm SW1-5 for coupling nine volt (9V) DC to a current generator circuit 12 or alternatively coupling nine volt (9V) DC to stationary terminal SW1-6 which in turn provides DC power to the nine volt (9V) ring generator circuit arranged within the dotted region as shown.

Current generator circuit 12 is comprised of resistors R1, R2 and R5, transistors Q1 and Q6, diode D2 and LED-type diode D3 which are connected in the manner shown to provide a constant current which simulates an off-hook signal, utilized in the manner to be more fully described hereinbelow. Resistor R2 serves as a current limiting resistor. LED D3 lights to denote operation of the constant current generator.

Ring generator circuit 14, which is utilized to generate a 20 Hz sine wave of a 90 volt amplitude, comprises a 555-type timing circuit 16 which, when activated by a nine volt DC input, applied to timer 16 through terminal VCC and resistor R13, provides a pulse train of equal width, positive-going pulses at a pulse rate of approximately 20 Hz at its output 16*a*.

The pulse train generated by the 555 timer 16 is simultaneously applied to the input of inverter U1A whose output is simultaneously coupled to the base electrodes of transistors Q2 and Q4, through resistor R6 and through inverter U1B and resistor R9.

The pulse train, as was set forth hereinabove, is simultaneously coupled to the –T input of a one-shot multivibrator operating as a phase delay circuit and whose Q output is coupled to the input of inverter U1E. The Q output of one-shot multivibrator U2A provides a phase delayed pulse which is coupled through the output of inverter U1E simultaneously to the base of transistor Q5 through resistor R8 and to the base of transistor Q3 through inverter U1F and resistor R7. Transistors Q2-Q5 and resistors R6-R9, together with resistor RIO, form a full bridge switching circuit which is powered by the nine volt (9V) DC source applied to the terminal VCC to provide drive current sufficient to drive transformer TR1, comprised of a pair of primary windings W1 and a pair of secondary windings W2, to generate a sine wave output. The pair of primary windings W1 and secondary windings W2 are coupled in parallel and the windings are arranged to provide a step-up transformer to magnify the input voltage preferably by ten to one (10:1), generating the desired output voltage which, in the present application, is a 20 Hz output of 90 volt amplitude with 15 mils of current from a nine volt (9V) DC, 150 mils current source. If desired, the frequency, amplitude and current of the circuit can be changed by selecting different component values for the passive elements. The component values chosen in the present invention have been selected to generate a signal which reproduces a standard bell ring signal employed in a conventional transmission between remote facsimile machines. The branch circuits BC1 and BC2 of the bridge circuit are alternately rendered conductive to alternately apply a positive voltage to opposing inputs of the input windings W1 for generating a sine wave from the positive-going pulses produced by timer circuit 16. The two input windings W1 are coupled in parallel as are the output windings W2.

The bell ring signal is selectively supplied through movable switch arm SW1-1 of the three-pole, double-throw switch SW1 described hereinabove.

The operation of the interface circuit of the present invention is as follows:

Assuming that the local facsimile is desired to be operated in combination with the PC and to function as a scanner, the switch SW2 is moved from the normal position, in which the movable switch arms are shown in solid line fashion, to the dotted line position simultaneously disconnecting the PC modem and the local facsimile from the telephone lines and directly connecting the PC receive line, PCR1 to ground and the PC transmit line PCT1 directly to stationary contact SW1-9. The local facsimile transmit line FXT2 is directly connected to ground and the facsimile receive line FXR2 is connected in common with line PCT1 to stationary contact SW1-9 of switch SW1. Switch SW3 may be either in the open or the closed position when switch SW2 is moved to the scan mode.

Switch SW1 is operated by pressing button B1 which is ganged to the movable switch arms SW1-1, SW1-4 and SW1-7 by a common linkage arm represented schematically by dotted line LA1. A biasing member or spring SWP1 normally biases the movable switch arms to the solid line position shown in Figure. By depressing switch button B1, the switch arms SW1-1, SW1-4 and SW1-7 are simultaneously moved to the dotted line positions shown in FIG. 1. Button B1 is maintained in the depressed position for a period preferably between one and two seconds. In the dotted line position, the nine volt (9V) DC source is coupled through switch arm SW1-4 and stationary terminal SW1-6 to the VCC terminals of ring generator circuit 14, producing a 20 Hz sine wave of 90 volt amplitude and a current of 15 mils at the secondary windings W2, which is applied to the PC line PCT1 through SW1-1, SW1-3, SW1-7, SW1-9, 126, SW2-6 and SW2-5, simulating what the PC believes is a request by a "remote" facsimile to transmit data thereto. The PC, which may be any type of computer (including but not limited to an Apple Macintosh, IBM PC, PCAT or PCXT) is provided with either an internal or external group III facsimile interface board, and

shifts to a receive mode for receiving what appears to the PC to be a facsimile transmission from a "remote" facsimile machine.

After holding the button B1 depressed for a time which need not exceed approximately two seconds, button B1 is released causing the nine volt (9V) DC source to be coupled to input **12***a* of current generator circuit **12**, which circuit applies the constant current to the facsimile receive line FXR2 to create what appears to the facsimile machine to be an off-hook condition. Simultaneously therewith, LED D3 lights indicating that the current generator circuit is presently in operation.

The local facsimile machine recognizes the constant current as representative of an off-hook condition preparing the local facsimile machine for transmission.

Thereafter, the conventional start button of the facsimile machine (not shown for purposes of simplicity) is pressed to start communication of the data scanned by the local facsimile machine from a document (or documents) placed within the facsimile machine document input (also not shown for purposes of simplicity).

The facsimile machine may be either a group I, group II, or group III machine, although optimum document resolution can be obtained through the use of a group III facsimile machine.

The conventional PC can store the transmitted data in its memory as a "picture" the resolution of the picture being 200 by 100 pixels for old facsimile machines, 200 by 200 pixels for standard facsimile machines and 400 by 400 pixels for new facsimile machines. Alternatively, a conventional OCR software package such as, for example, a CAERE OCR program available from Bitsoftware may be employed. Many alternative OCR software packages may be utilized to convert the "picture" transmitted by the facsimile machine to binary character form for word processing use or the like.

Operation of the facsimile machine in combination with the PC wherein the facsimile machine operates as a printer is as follows:

The ring generating circuit is not required to be operated in this mode and in applications where a facsimile machine is interfaced with a PC for use only as a printer, the ring generating circuit and the cooperating spring bias switch may be eliminated.

Switch SW2 shown in FIG. **1** is moved from the solid line to the dotted line position decoupling the PC and facsimile machine from the telephone lines and coupling the PC and facsimile machine together.

Switch SW1 is operated to power the current generator circuit **12** causing both the PC and the facsimile machine to see an off-hook condition.

The computer (PC) is operated either by providing a switch such as a push button switch (not shown for purposes of simplicity) to enter into a standard protocol with the facsimile machine and thereafter to transmit information in standard facsimile machine format. The facsimile machine senses that it is communicating with a remote facsimile machine and creates a document in accordance with the data received from the PC in "pixel" form. The PC may be provided with a standard program having a print mode in which the facsimile machine is identified in the printing routine as the specific output device being utilized during such a print mode. Upon completion of printing mode, switch SW2 may be returned to the solid line position decoupling the PC from the facsimile machine and recoupling the PC and facsimile modems to their associated telephone lines.

FIGS. **2***a*-**2***h* show various arrangements in which the present invention may be utilized.

Noting, for example, FIG. **2***a*, the circuitry **10** of the present invention is coupled between a standard facsimile machine **30**, a PC-type computer **40** having a facsimile modem circuitry **41** and central office telephone lines **50** and **51**. In the arrangement shown in FIG. **2***a*, the facsimile modem circuitry may be either internal or external to the PC-type computer **40**.

FIG. **2***b* shows another alternative embodiment in which the circuitry of the present invention is incorporated into the PC-type computer and may be arranged on its own printed wiring board or on a printed wiring board which is common to the circuitry **10** of the present invention and the facsimile modem circuitry **41**. The arrangement of FIG. **2***b* is otherwise the same as that shown in FIG. **2***a*. The circuit **10** shown in FIG. **2***b* is provided with three RJ-11 telephone cable connections for respective connection with the facsimile machine **30** and telephone lines **50** and **51**. If only one additional telephone cable is provided, the standard facsimile machine **40** and the internal facsimile modem **41** may share that cable.

FIG. **2***c* shows another alternative arrangement in which the circuitry **10** of the present invention is integrated into the standard facsimile machine **30**. The operation of the arrangement of FIG. **2***c* is otherwise similar to those shown in FIGS. **2***a* and **2***b*.

FIG. **2***d* shows an arrangement in which the circuitry **10** of the present invention is mounted upon its own printed wiring board and is arranged within the PC-type computer **40** and is electrically connected to the internal facsimile modem **41** by an external RJ-11 cable as shown. The operation is otherwise the same as the embodiments of FIGS. **2***a*-**2***c* described hereinabove.

The circuitry **10** of the present invention may alternatively be placed upon a printed circuit card of approximately a credit card size for insertion in a bus slot provided in present-day PCs enabling the circuit on the printed circuit card, inserted into a slot provided along the exterior of the PC, to be coupled to a PCMCIA bus which is an additional bus that may be addressed by the PC.

FIG. **2***e* shows still another arrangement in which the PC-type computer **40** is coupled to external facsimile modem circuitry **41**, for example, through an RS-232 cable. The facsimile machine interfaces to the external facsimile modem **41** through circuitry **10** by way of an RJ-11 telephone cable. When in the normal mode of operation, circuitry **10** interfaces central office telephone lines **50** and **51** through the RJ-11 telephone cables, as shown. Cable **50** may be employed for standard facsimile machine telephone communications while telephone line **51** is used for the external facsimile modem circuitry. If only one central office telephone line is available, line **50** may be shared in the manner previously described.

FIG. **2***f* shows an arrangement in which interface circuit **10** is internal to the facsimile machine. PC-type computer **40** is coupled to the facsimile modem circuitry **41** and interface circuit **10** through an RS-232 cable. When in the normal mode of operation, circuitry **10** interfaces the central office telephone lines **50** and **51** through RJ-11 telephone cables, as shown. Cable **50** may be employed for standard facsimile machine telephone communications while telephone line **51** is used for the external facsimile modem circuitry. If only one central office telephone line is available, line **50**, for example, may be shared in the manner previously described. The arrangement of FIG. **2***f* is used with PC's which do not have a fax modem installed. When interface **10** is installed internal to the facsimile, the fax modem of the fax machine incorporates many of the functions of circuit **10**, through integration of the already existing circuitry components of the fax modem.

The present invention may be employed with telephone systems having digital signal processing. FIG. **2***h*, which is similar to FIG. **2***f*, and which shows like circuits designated with like numerals, further includes an interface **60** for digital signal processing. The send and receive options required for scanning and printing are provided by interface **60**, which may, for example, be a chip set such as PEB 2091 N-V4.4 and EPB 2186 N-V4.4, manufactured by Siemens. Any other chip set having similar operating characteristics may be employed. As other digital signal formats come into use, such as ADSL (Asymmetric Digital Subscriber Line) HDSL (High Bit Rate Digital Subscriber Line), or the like, a chip set for handling such formats may be substituted for interface **60**.

As shown in FIG. **2***i*, a RAM and/or Fixed Disk **70** may be incorporated into the interface **10**, integrated with a fax modem **30** to allow for the capture of images or documents for later transfer into the PC **40** or the facsimile machine **30**, or for image enhancement within the interface configuration **10**. The addition of the data storage feature is particularly desirable for the fax machine or fax modem when they are in normal fax send or receive modes.

Optionally, the data storage feature is desirable for field application usage where information may be downloaded from a PC and stored in interface **10** for later transfer to a facsimile machine or a PC. Storage would be retained in this instance by battery backup incorporated in the RAM memory **70**. Battery backup is not necessary for fixed disk storage.

FIG. **2***j* shows an arrangement for automated scanning and printing functions between a fax modem and a fax machine.

As represented in FIGS. **2***a*-**2***f*, in order to activate an automated process for scanning or printing, the ring circuit **4** (FIG. **1**) interfaces with the Tip and Ring features of the fax modem or fax machine. This is dependent on keying in a code on the fax keypad, such as ## or #* or any other predetermined code in order to respectively identify the scanning and printing functions. Interface **10** detects the tones generated by the inserted code (at the tone receiver **25** and generates a ring signal. The ring signal is detected and interpreted by the ring detect circuit of the fax modem or the fax machine. The fax modem or fax machine then generates receive signals or tones which indicate a connection. The fax modem or fax machine commences the scanning of the fax image or print cycle.

By depressing a predetermined code such as ## on the fax machine key pad, the tone detector circuit **25** interprets this code, enabling a control circuit to activate first (**26**) and second (**27**) relay means. Relay **26** disconnects the fax machine and the fax modem (connected to the PC) from the Central Office terminal lines. Relay **27**, then connects 9V to the ring generator circuit **14** causing a sinusoidal ring signal of a predetermined frequency and amplitude to be generated to the PC fax modem. The PC fax modem answers and starts the scanning process from the fax machine to the PC.

A communication program stored in the PC allows the code #* (for example) to be entered, generating the tone signal from the fax modem. The tone detector circuit in the interface **10** interprets this code, enabling a control circuit to activate first (**26**) and second (**27**) relay means. Relay **26** disconnects the fax machine and the fax modem (connected to the PC) from the Central Office terminal lines. Relay **27**, then connects 9V to the ring generator circuit **14** causing a sinusoidal ring signal of a predetermined frequency and amplitude to be generated to the fax machine. The fax machine answers and starts the printing process form the PC fax modem.

The switch version does not require the ## or #* or any other code, but activates the automated scanning/printing by pressing the ringer button B2.

The provision of the scan and print functions internal to the facsimile machine may also be accomplished by utilizing the analog output of the optical scanning circuit **75** of the facsimile machine (FIG. **2***g*). The analog signals are processed by the control/modem circuitry **76** where they are converted into a digital serial signal and then transmitted through the RS232 sending interconnect port, the signal is then received by an RS232 connector at the PC. The aforementioned procedure utilizes unused signal lines which are available on most modem chips such as the Rockwell chip series.

A send and receive driver software package then implements the following action. The receive driver software accepts the digital image for storage or processing as appropriate. This send/receive driver communications software package also has the ability to send a digital image to the facsimile machine for printing purposes. The facsimile machine's control/modem circuitry then processed by the print driver **77** for printing. This linkage method for scanning and printing utilizing a fax machine is particularly useful for a computer without a fax modem. Any available send/receive communications software package is acceptable.

The commands of ## or #* for sending and receiving are still appropriate for this application although any other desired commands may be selected.

For the automated operation, the circuitry **10** of FIG. **1** is provided with device **25** which includes an automatic tone detector circuit for receiving a unique number dialed by either the facsimile machine or the PC modem. Upon recognition of the unique number, as set forth above or by generation using other techniques, the tone receiver operates a driver circuit **26** for operating switch SW2 to decouple the PC and the facsimile machine from their associated telephone lines and for connecting the PC to the facsimile machine. Driver circuit **26** may be a relay or its equivalent for operating an armature (not shown) to move the switch arms between their two operating states. Driver unit **27** which likewise may be a relay or its equivalent, operates the switch SW1 to the position energizing the ringing circuit **14**. A timer is set and when two seconds elapses, unit **27** is deenergized causing the off-hook signal to be generated by current generator circuit **12** through the release of the operating button. When printing or scanning is complete, the tone receiver unit is reset. A simplified flow diagram of the aforementioned operation is shown in FIG. **1***a*.

The circuitry of the present invention is highly simplified in design and provides effective communication between the PC and local facsimile machine enabling the local facsimile machine to provide the dual functions of operating independently for transmission or reception to remote facsimile machines as well as functioning as a scanner or printer with a local PC. The circuitry of the present invention provides all the necessary signal conditions which lead the PC and local facsimile machine to believe that they are communicating with one another over a telephone line. The facsimile machine, although operating in its normal fashion, functions very effectively as a scanner or printer as and when needed and provides a scanning or printing capability at a mere fraction of the cost of conventional scanners or printers.

Simple switching of SW2 returns the PC and facsimile machine to normal use.

The novel ring circuit provides the required ring signal which is conventional in present-day facsimile transmission application through the employment of an inexpensive, low voltage, DC battery or 9V power source and, through the operation of two switches incorporated in the novel interface circuitry of the present invention, followed by operation of the facsimile start switch, provides an interface circuit which

is extremely easy to use and which eliminates the need for more complicated and expensive microprocessor-based devices.

A latitude of modification, change and substitution is intended in the foregoing disclosure, and in some instances, some features of the invention will be employed without a corresponding use of other features. Accordingly, it is appropriate that the appended claims be construed broadly and in a manner consistent with the spirit and scope of the invention herein described.

What is claimed:

1. A method of printing in a facsimile machine when the facsimile machine is connected to a computer by a bi-directional direct passive link, comprising:

providing a digital serial communications port in the facsimile machine;

receiving an instruction at the digital serial communications port from the computer to place the facsimile machine into a print mode, the instruction being received using a standard protocol of the facsimile machine;

receiving digital image data at the digital serial communications port from the computer via the bi-directional direct passive link, the digital image data being transmitted in a standard facsimile machine format and being representative of content to be printed onto media by the facsimile machine; and

processing the digital image data substantially as it is received at the digital serial communications port to print the content onto the media at the facsimile machine.

2. The method of claim **1**, further comprising interfacing the facsimile machine with telephone lines when the facsimile machine is in a normal mode of operation to send and receive facsimile communications.

3. The method of claim **2**, wherein the interfacing is performed through RJ-11 telephone cables.

4. The method of claim **2**, further comprising operating the facsimile machine in the normal mode of operation while performing the printing of digital image data received at the digital serial communications port.

5. The method of claim **1**, wherein the receiving the instruction at the digital serial communications port from the computer further comprises receiving the instruction from send/receive driver software.

6. The method of claim **5**, wherein the receiving digital image data at the digital serial communications port further comprises receiving the digital image data from the send/receive driver software.

7. The method of claim **1**, further comprising processing the digital image data at a print driver of the facsimile machine substantially as it is received at the digital serial communications port.

8. The method of claim **1**, further comprising initiating the printing at the facsimile machine.

9. A method of scanning in a facsimile machine when the facsimile machine is connected to a computer by a bi-directional direct passive link, comprising:

providing a digital serial communications port in the facsimile machine;

receiving an instruction at the digital serial communications port from the computer to place the facsimile machine into a scanning mode, the instruction being received using a standard protocol of the facsimile machine;

scanning content from media provided within the facsimile machine to create digital image data representative of the content; and

providing the digital image data substantially as it is created to the digital serial communications port for communication to the computer via the bi-directional direct passive link, the digital image data being transmitted in a standard facsimile machine format.

10. The method of claim **9**, further comprising interfacing the facsimile machine with telephone lines when the facsimile machine is in a normal mode of operation to send and receive facsimile communications.

11. The method of claim **10**, wherein the interfacing is performed through RJ-11 telephone cables.

12. The method of claim **10**, further comprising operating the facsimile machine in the normal mode of operation while performing the scanning of content to create the digital image data provided to the digital serial communications port.

13. The method of claim **9**, wherein the receiving the instruction at the digital serial communications port from the computer further comprises receiving the instruction from send/receive driver software.

14. The method of claim **13**, wherein the providing the digital image data to the digital serial communications port further comprises communicating the digital image data to the send/receive driver software.

15. The method of claim **9**, further comprising initiating the scanning at the facsimile machine.

* * * * *

EXHIBIT E

TOSHIBA
Leading Innovation

1 800 GO TOSHIBA › International › Toshiba.com › Mobile

PRODUCTS | DOCUMENT MANAGEMENT SERVICES | SUPPORT & DRIVERS | COMPANY | BLOG

FIND A LOCATION > ZIP GO

MULTIFUNCTION
- Color MFPs
- Sm/Med Workgroup
- Large Workgroup
- Printer-Based MFP

PRINTERS
- Color Printers
- Sm/Med/Lrg Workgroup
- Thermal Printers
- Wide Format

FAX/SCANNERS
- Mid Volume Fax
- High Volume Fax
- Mid Volume Scanners
- Network Scanners
- High Volume Scanners
- Portable Scanners

SOFTWARE
- Document Capture
- Document Management
- Document Delivery

RETAIL
- Point of Sale Systems
- Point of Sale Solutions
- Point of Sale Printers and Peripherals

Streamline with Toshiba

Toshiba takes a device-agnostic approach to helping companies streamline and manage their print environment. In addition to Toshiba products, we support HP, Fujitsu and ScanSnap because we know IT needs to offer more than one brand to satisfy the needs of all users.

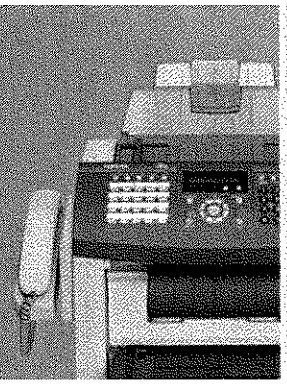

Help Me Choose

Our Toshiba Dealers, can help you cut your printing expenses by up to 40% virtually overnight, with easy-to-implement solutions for businesses of all sizes.

Contact Dealer

COLOR MFPS
- e-STUDIO2040C
- e-STUDIO2050C
- e-STUDIO2051C
- e-STUDIO2540C
- e-STUDIO2550C
- e-STUDIO2551C
- e-STUDIO3040C
- e-STUDIO3540C
- e-STUDIO4540C
- e-STUDIO5540C
- e-STUDIO6540C
- e-STUDIO6550C

SMALL / MEDIUM WORKGROUP
- e-STUDIO202S
- e-STUDIO203S
- e-STUDIO203SD
- e-STUDIO223
- e-STUDIO195
- e-STUDIO225
- e-STUDIO206L
- e-STUDIO256
- e-STUDIO306
- e-STUDIO356
- e-STUDIO456
- e-STUDIO506

LARGE WORKGROUP
- e-STUDIO556
- e-STUDIO656
- e-STUDIO756
- e-STUDIO856
- e-STUDIO905
- e-STUDIO1105
- e-STUDIO1355

TAA COMPLIANT
- e-STUDIO306G
- e-STUDIO456G
- e-STUDIO656G
- e-STUDIO856G
- e-STUDIO3040CG
- e-STUDIO4540CG
- e-STUDIO5540CG
- e-STUDIO6540CG

PRINTER-BASED MFP
- HP LaserJet M425dn
- HP LaserJet M525dn
- HP LaserJet M525f
- HP LaserJet M375nw
- HP LaserJet M475dn
- HP LaserJet M475dw
- HP LaserJet M575dn
- HP LaserJet M575f
- HP LaserJet M4555
- HP Color LaserJet CM4540
- Lexmark XS463de
- Lexmark XS652de
- Lexmark XS734de
- Lexmark XS654de
- Lexmark XS658dfe
- Lexmark XS658dme
- Lexmark XS925de
- Lexmark XS748de
- Lexmark XS795dte
- Lexmark XS798dte

More Hewlett Packard
More Lexmark

©Toshiba America Business Solutions, Inc. Electronic Imaging Division. All rights reserved.
Find A Location | Careers | Terms | Sitemap

SIGN UP FOR THE NEWSLETTER

TOSHIBA
Leading Innovation >>>

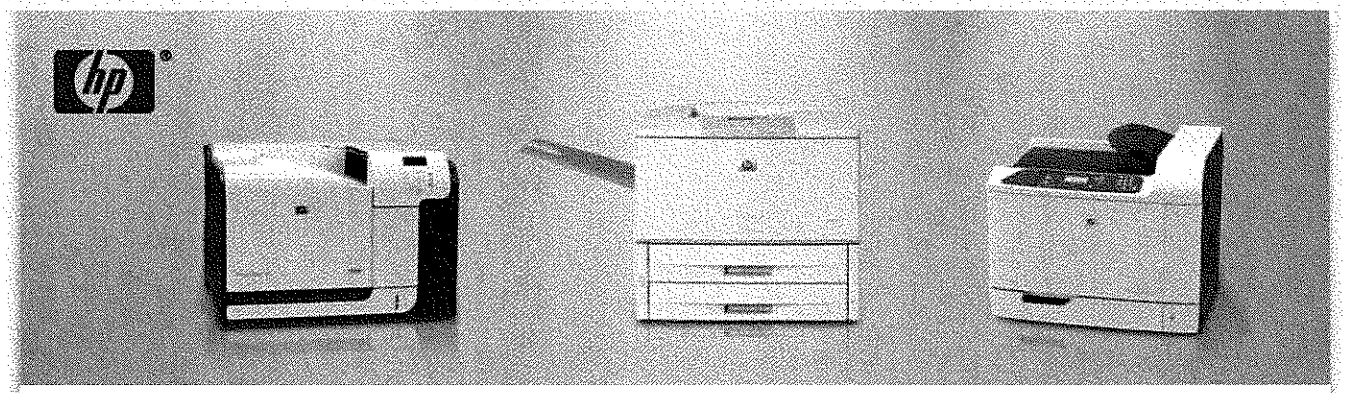

Managed Print Advanced **Specialist**

As Hewlett Packard Managed Print Advanced Specialists, we can offer our customers competitive pricing on the entire HP LaserJet product line including mono and color single function and MFP products. Toshiba can be your one-stop source for sales, servicing, fleet monitoring, and affordable, high quality output with Original HP LaserJet print cartridges for these devices. A combined HP and Toshiba solution can help you reduce costs and enhance productivity throughout your organization.

- Remove Filter
  - Color Laser Printers
  - Sm/Med Laser Workgroup
  - Large Laser Workgroup
  - Printer-based MFPs
  - Business Inkjets

Pricing listed is MSRP. Contact your local Toshiba Dealer for additional pricing information.

Printer-based MFPs

M1212nf Monochrome Printer-based MFP
> Click Here for Product Brochure
$254 MSRP

M2727 Monochrome Printer-based MFP
> Click Here for Product Brochure
$754 MSRP

M3035xs Monochrome Printer-based MFP
> Click Here for Product Brochure
$2,332 MSRP

M1536dnf Mono Printer-based MFP
> Click Here for Product Brochure
$299 MSRP

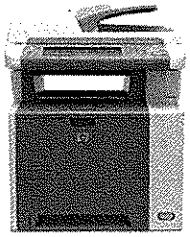

$1,865 MSRP
M3035 Monochrome Printer-based MFP
> Click Here for Product Brochure

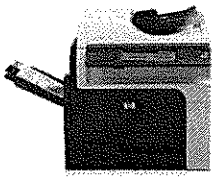

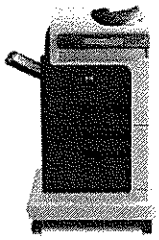

M4555f Monochrome Printer-based MFP
Click Here for Product Brochure
$4,499 MSRP

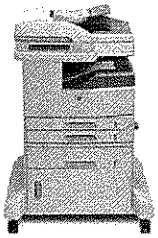

M5035x Monochrome Printer-based MFP
Click Here for Product Brochure
$5,759 MSRP

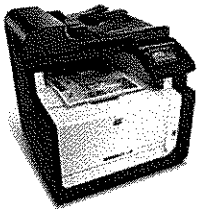

CM1415fnw Color Printer-based MFP
Click Here for Product Brochure
$573 MSRP

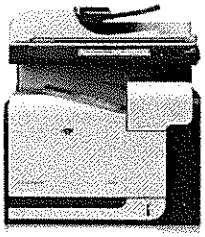

CM3530 Color Printer-based MFP
Click Here for Product Brochure
$2,915 MSRP

M4555h Monochrome Printer-based MFP
Click Here for Product Brochure
$3,499 MSRP

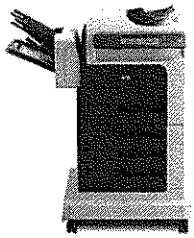

M4555fskm Mono Printer-based MFP
Click Here for Product Brochure
$2,799 MSRP

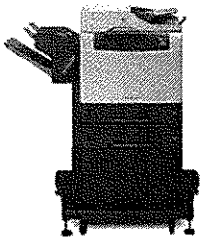

M4345xs Monochrome Printer-based MFP
Click Here for Product Brochure
$5,639 MSRP

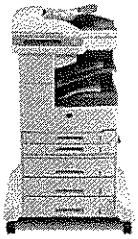

M5035xs Monochrome Printer-based MFP
Click Here for Product Brochure
$7,049 MSRP

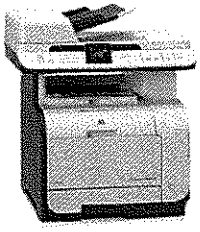

CM2320nf Color Printer-based MFP
Click Here for Product Brochure
$893 MSRP

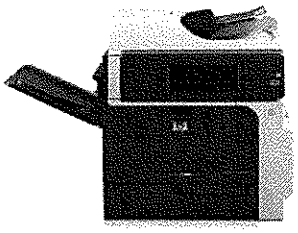

CM4540 Color Printer-based MFP
> Click Here for Product Brochure
$3,799 MSRP

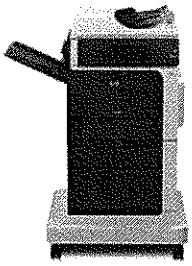

CM4540f Color Printer-based MFP
> Click Here for Product Brochure
$4,499 MSRP

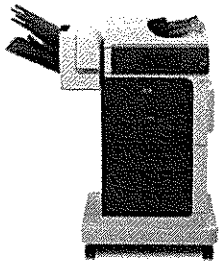

CM4540fskm Color Printer-based MFP
> Click Here for Product Brochure
$5,549 MSRP

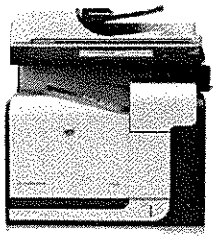

CM3530fs Color Printer-based MFP
> Click Here for Product Brochure
$3,498 MSRP

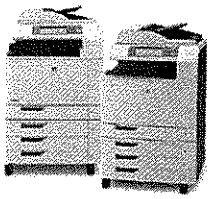

CM6040f Color Printer-based MFP
> Click Here for Product Brochure
$10,498 MSRP

©Toshiba America Business Solutions, Inc. Electronic Imaging Division. All rights reserved.
Pricing listed is MSRP. Contact your local Toshiba Dealer for additional pricing information.